CSS – OD /
Commercial Storage Solution

Quick Installation Guide

for Europe

Draft 23-07-2024

Legend and Safety Instructions

Legend

WARNING! This symbol denotes a hazard. It calls attention to a procedure that if not correctly performed or adhered to could result in injury or loss of life. Do not proceed beyond a warning note until the indicated conditions are fully understood and met.

CAUTION! Denotes a hazard. It calls attention to a procedure that, if not correctly performed or adhered to, could result in damage or destruction of the product. Do not proceed beyond a caution sign until the indicated conditions are fully understood and met.

This symbol indicates that this is the Protective Earth (PE) terminal that must be firmly grounded to ensure the safety of operators.

Safety Instructions

WARNING: RISK OF ELECTRIC SHOCK
DO NOT touch the wires, contacts, terminals, or any conductors connected to the grid circuit inside the equipment.
Failure to follow safety instructions could result in severe injury or death from electric shock.

WARNING: LETHAL HIGH VOLTAGES exist inside the product.

- Note and abide by all warning signs on the product.
- Observe the safety precautions listed in this manual and other related documents.

WARNING: Damaged Equipment Hazards

- Damaged equipment or system failure may cause electric shock or fire!
- Perform an initial visual inspection of the equipment for damage or other hazards before operation.
- Check whether other external devices or circuit connections are secure.
- Confirm that this equipment is in a safe state before operating it.

WARNING: This equipment must be installed by **licensed electrician** and qualified personnel only. The installation and wiring of this equipment must comply with all applicable national, state/provincial, local electrical codes and standards. Attempting installation by unqualified individuals could result in unsafe operation, code violations, personal injury/loss of life, or damage to the equipment.

WARNING: Battery Protection
DC HIGH VOLTAGE! ELECTRIC SHOCK HAZARD!
The battery in the system generates a high voltage when connected. Accidental contact can result in electric shock or life-threatening injuries.

WARNING: Ground Fault Protection

- When a ground fault occurs in the integrated PCS, there may be fatal high voltage in parts that are not originally charged. DANGEROUS IF ACCIDENTALLY TOUCHED!
- Before operation, ensure there is no ground fault in the system, and take relevant protective measures.

WARNING: Live Line Measurement

- There are high voltages in the equipment in the integrated PCS, and accidental touch may cause fatal electric shock hazards.
- During live measurement, take appropriate protection, such as wearing insulating gloves.
- There must be an accompanying person to ensure personal safety.

WARNING: Improper parameter settings

- Improper parameter settings may affect the normal function realization of internal devices.
- Only authorized professionals can set the parameters.

WARNING: Regulatory Compliance
The installation and various operations of the integrated PCS must comply with the relevant standards and regulations of the country/region where the project is located

Tools and Materials

Personal Protective Equipment


Safety Rubber Shoes


Helmet


Rubber Gloves


Safety Clothing


Goggles

Battery Cabinet 102.4 kWh & Battery Inverter 50 kW

WARNING! Use only insulated and protected tools


Torque wrench with 7mm, 10mm, 17mm, 18mm, 19mm sockets


Wire Cutter


Crimping tool


Phillips screwdriver ⌀6 mm, L= 230 mm


Heat gun

Multimeter


Cable Stripper


Wire Stripper


Drill


Box Cutter


Pipe Cutter


Ladder


Rubber Hammer


Flat Head Screwdriver


Flat Head Screwdriver for Terminal Block Screws


Adjustable Wrench


Open-end torque wrench

General Description of Battery Cabinet & Battery Inverter

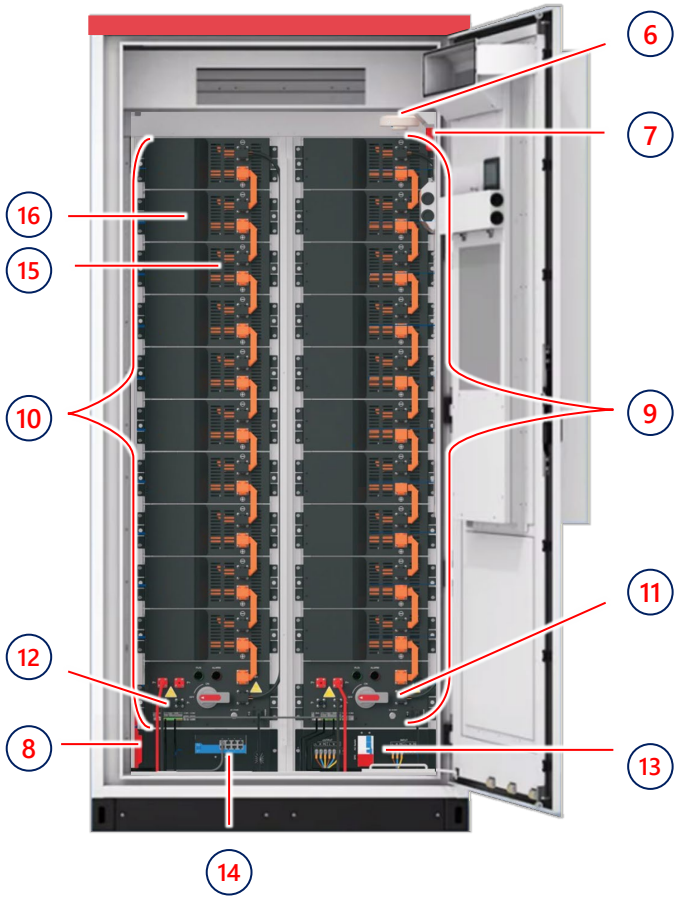

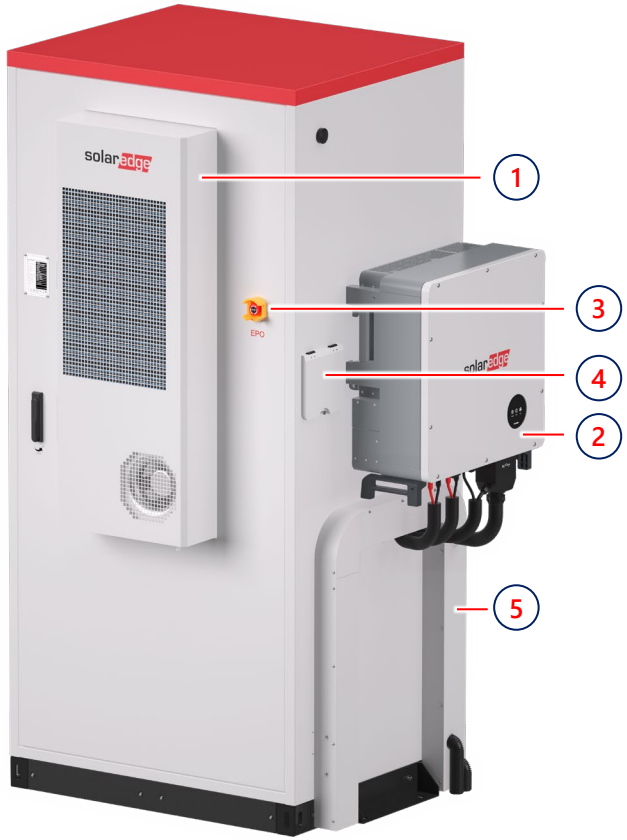

1. Battery Cabinet HVAC
2. Battery Inverter 50 kW
3. Emergency Power Off (EPO) switch
4. CSS Local Interface
5. Wiring Duct
6. Photoelectric Smoke Detector
7. Aerosol Fire Extinguisher 1
8. Aerosol Fire Extinguisher 2
9. Cluster 1 (10 EMs + CMU1)
10. Cluster 2 (10 EMs + CMU2)
11. Cluster Management Unit 1
12. Cluster Management Unit 2
13. AC Interface Box
14. Battery Cabinet Management Unit
15. Energy Module (x20)
16. Energy Module Management Unit

Dimensions and Weights

Battery Cabinet 102.4 kWh

1433 KG

Battery Inverter 50 kW

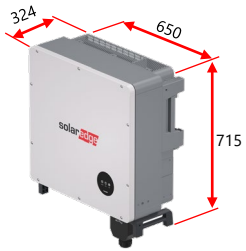

68 KG

Battery Inverter 50 kW Battery Cabinet 102.4 kWh

*Assembled Dimensions

1501 KG

All dimensions are in [mm]

Default Layout & Clearance Distances (Top View)

All dimensions are in [mm]

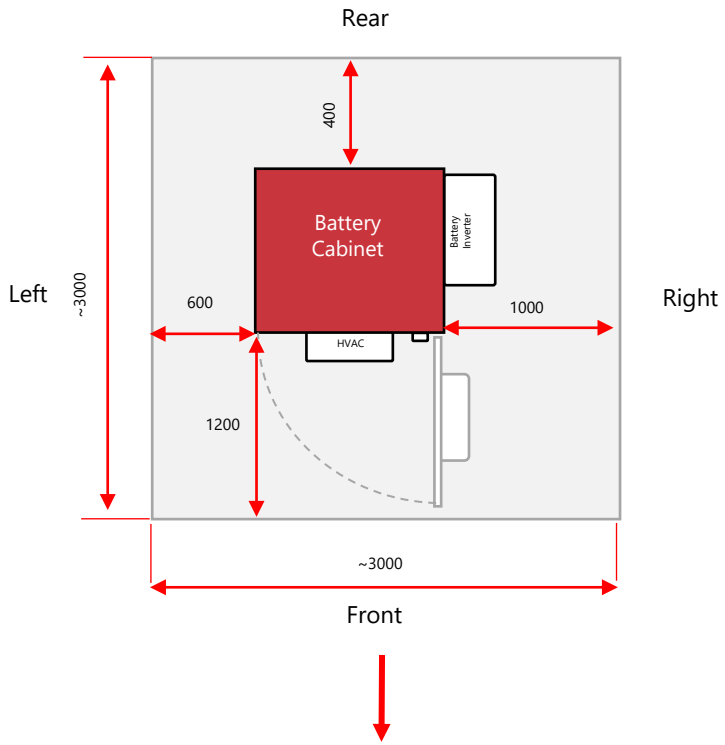

Battery Cabinet + Battery Inverter	
Direction	**Distance [mm]**
Front	1200
Rear	400
Right	1000
Left	600

NOTE!
Installers are hereby notified that local codes and regulations could extend the required clearances beyond what is specified in this manual.
Before proceeding with installation, consult with relevant authorities to ensure compliance with local regulations concerning clearance distances.

Environmental Conditions & Requirements

CAUTIONS and Requirements of Installation Environment

1. When the equipment is running, do not cover the vents or heat dissipation system to prevent fire due to high temperature.
2. The equipment should be installed in an area away from liquids; it is forbidden to install it under water pipes, air outlets and other places that are prone to condensation, or under places that are prone to water leakage, such as air-conditioning outlets, vents, and outlet windows in the machine room, to prevent liquids from entering the inside of the equipment and causing malfunction or short circuit.
3. Do not place the equipment in an environment with flammable or explosive gas or smoke, and do not perform any operations in such environment.
4. The equipment should be installed away from desert or sandy environment.

CAUTION! For indoor installations ventilated room is required

CAUTION!
CSS – OD solution must be installed:>2km from the sea, when installed in an outdoor location, or >1km when installed in an indoor locations.

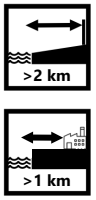

CAUTION! When Installed in indoor locations consider heat dissipation values of all installed devices when choosing appropriate room / space for their installation

NOTE! Battery Cabinet & Battery Inverter max noise is <65 dBA, 1 meter distance

Battery Cabinet	
Max Power	**Heat Dissipated**
50 kW	0.87 kWh 2970 BTU
Battery Inverter	
Max Power	**Heat Dissipated**
50 kW	1.5 kWh 5118 BTU

Site Power & Communication Layout

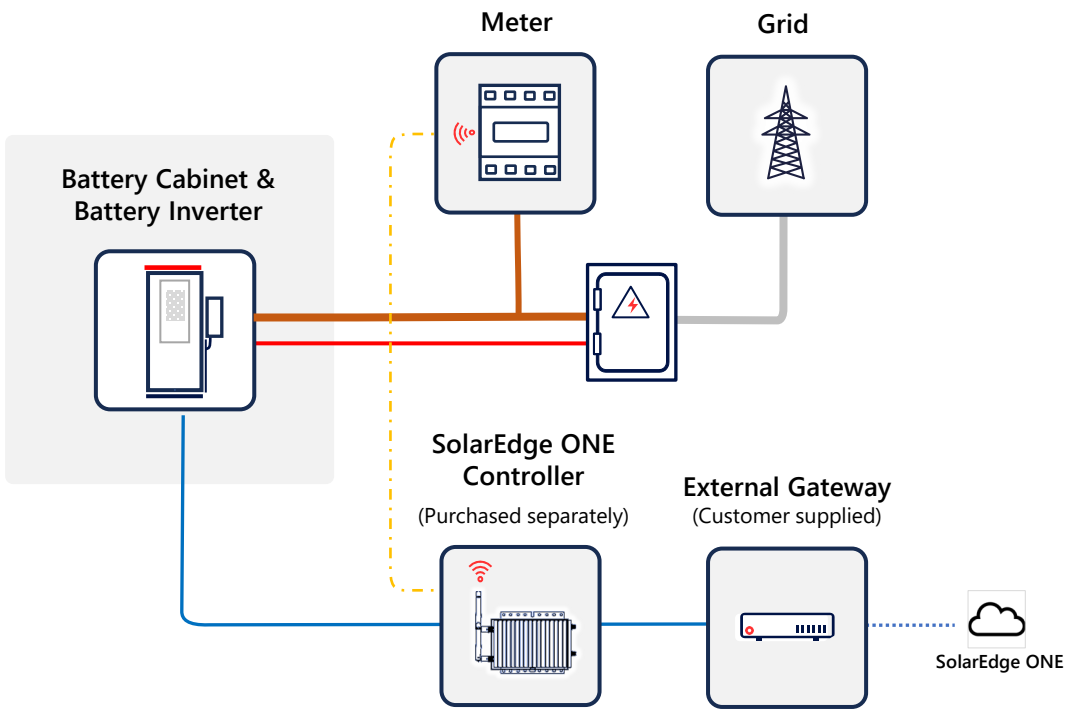

Three Phase AC Cable, multi stranded class 5 or 6, 25-35 mm², 50 kW

Single Phase Auxiliary AC Cable

Modbus TCP Comm. Cable (LAN)

RS485 Comm. Cable

Battery Cabinet – Forklift Transportation Guidelines

solaredge

Transporting Battery Cabinet with the wooden box

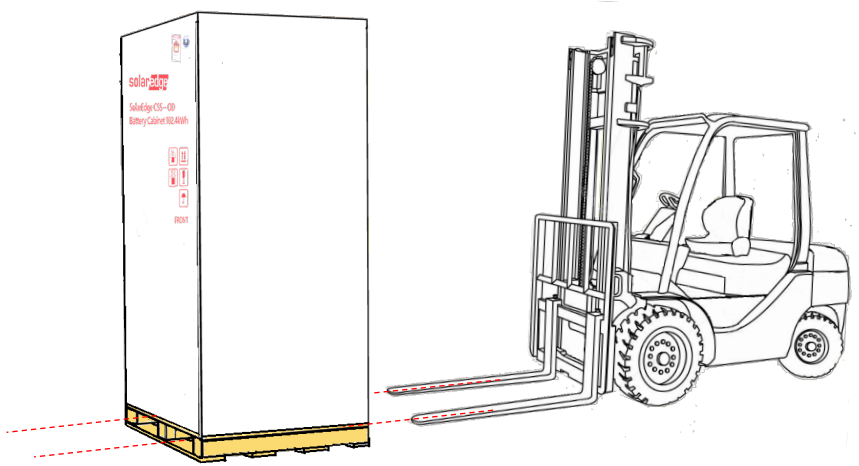

Forklift Requirements

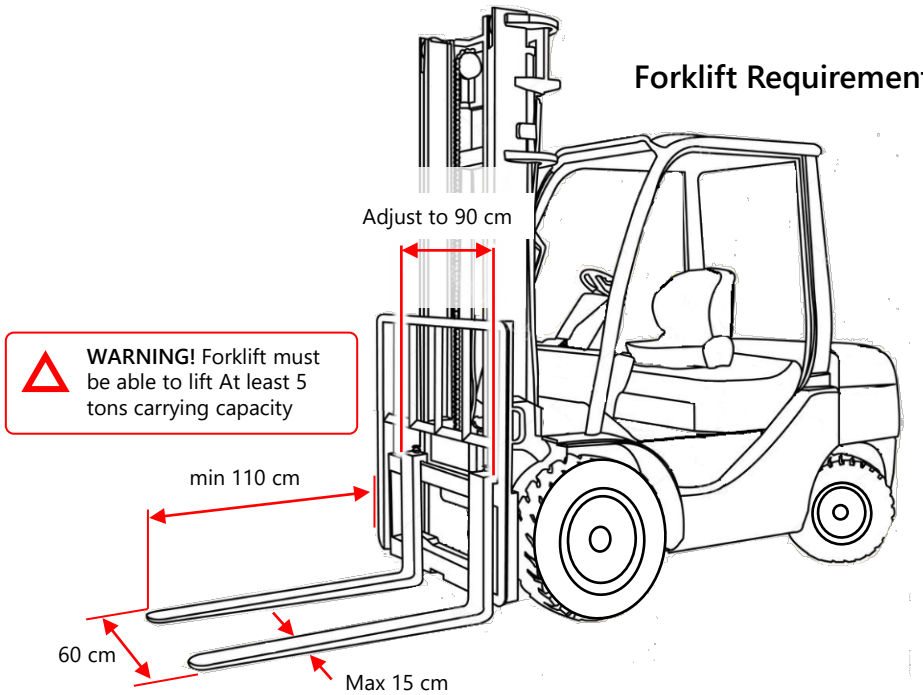

Transporting Battery Cabinet Standalone

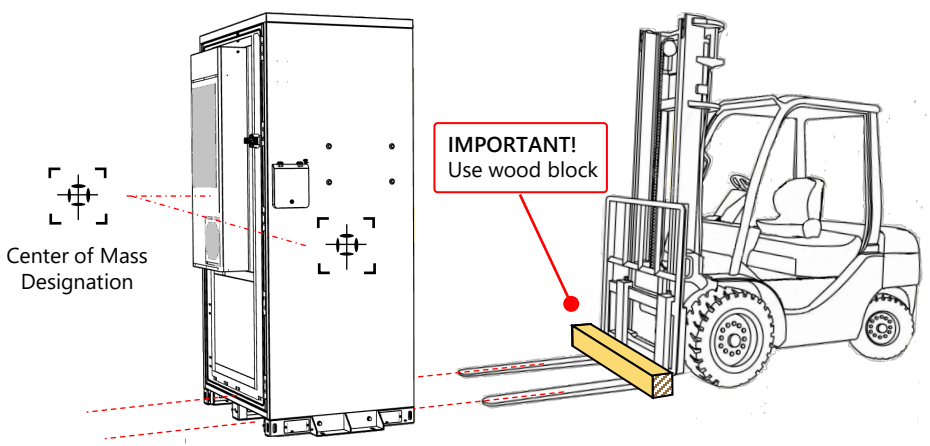

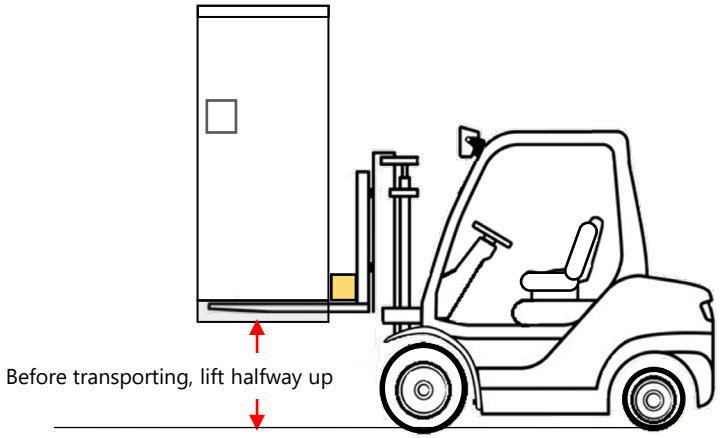

Cabinet Transportation – Crane lifting Guidelines

Unpacking Battery Cabinets

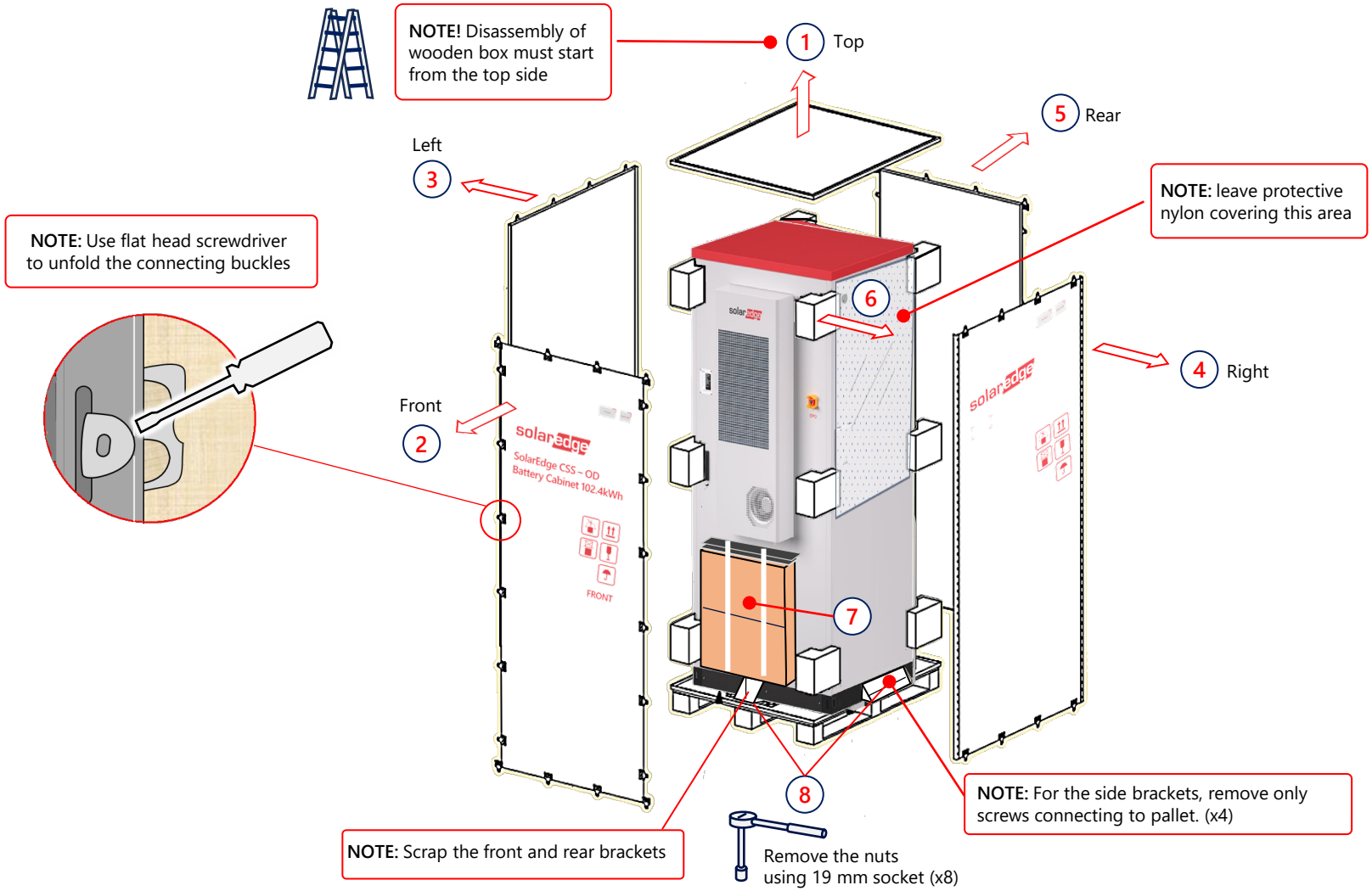

Mounting Battery Cabinet on Steel Frame

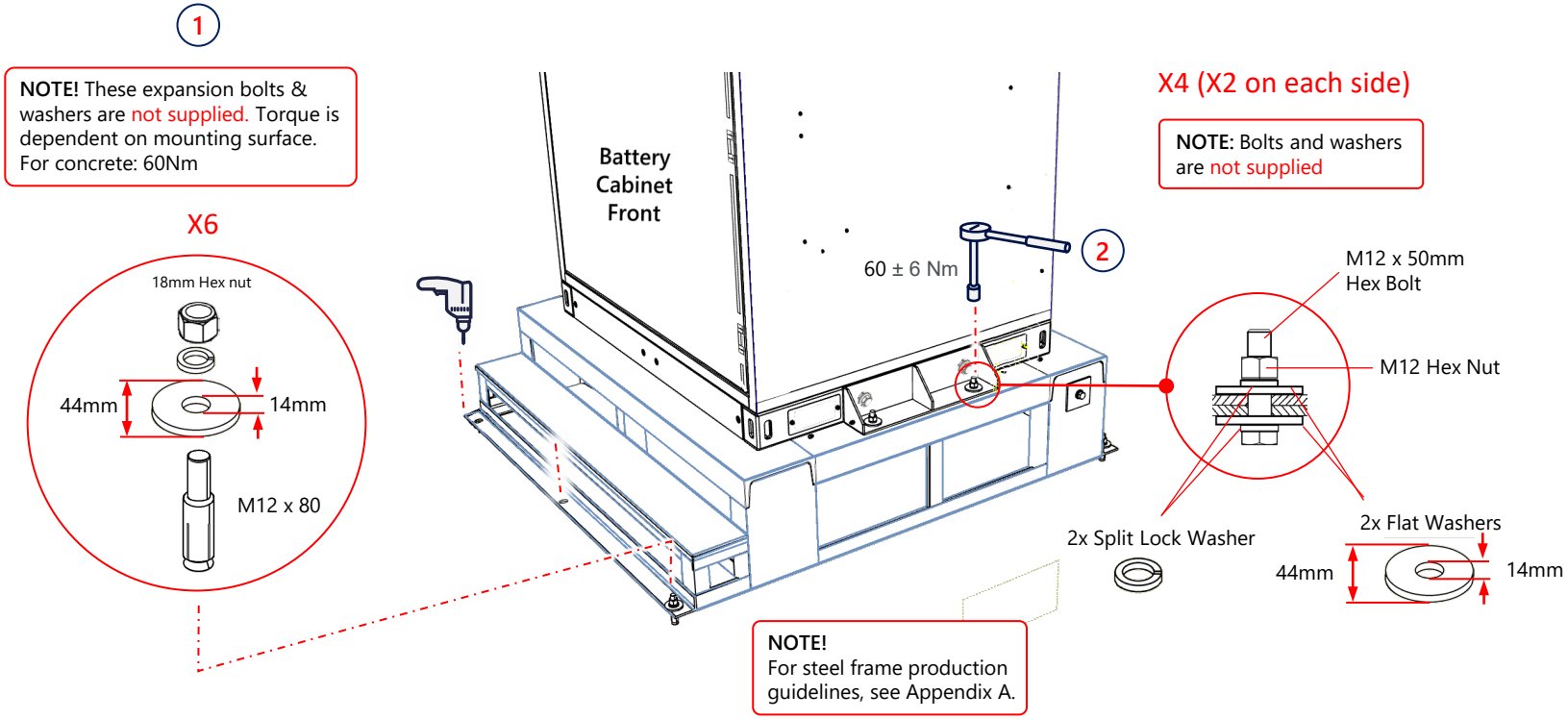

IMPORTANT!

1. Open Steel Frame must be provided by the customer.
2. General Dimensions & Requirements of the steel frame are provided in Appendix A.
3. Customer's civil engineer shall review and approve the customer's provided structure (open steel frame).

Mounting Battery Cabinet Directly on Concrete Pad

NOTE! Concrete pad guidelines are in Appendix A

Option 1: Concrete Pad with pre-integrated studs

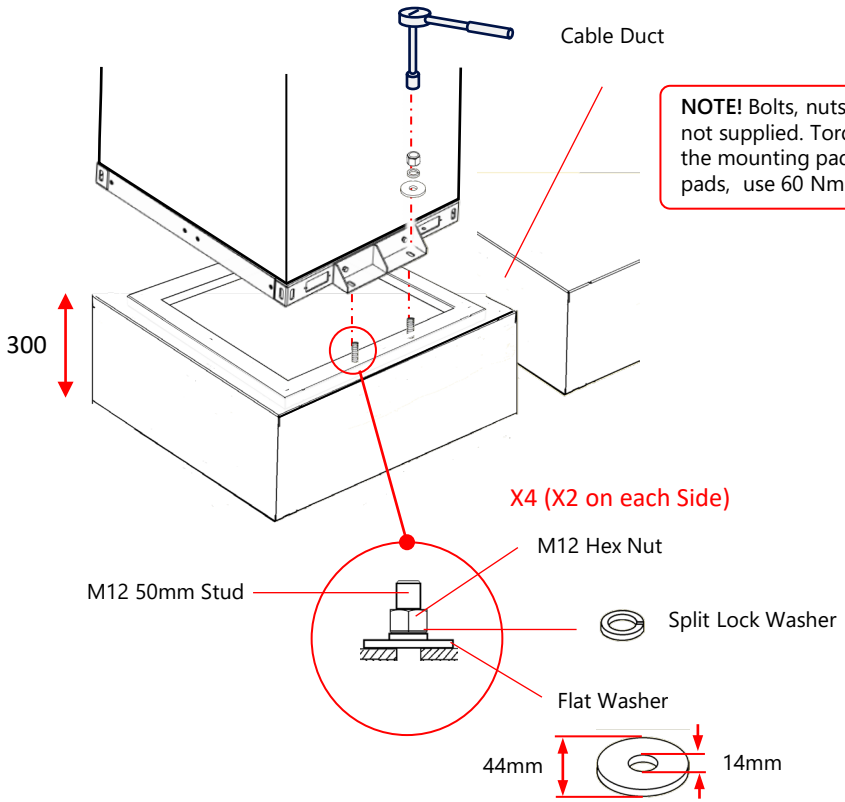

NOTE! Bolts, nuts, and washers are not supplied. Torque depends on the mounting pad. For concrete pads, use 60 Nm

Option 2: Concrete Pad & Drilling occurs on site

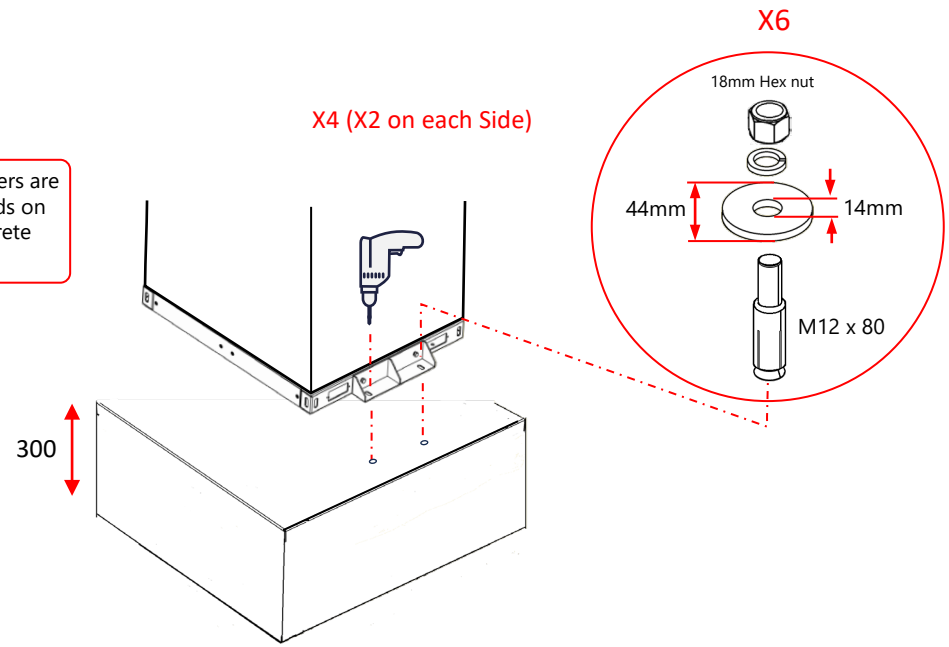

All dimensions are in [mm]

Battery Cabinet Package Contents (Inside Accessories Box)

Battery Cabinet (Cluster 1)
to Battery Inverter DC Cables (3m) (A)

BAT1

Battery Cabinet (Cluster 2)
to Battery Inverter DC Cables (3.5m) (B)

BAT2

Battery Cabinet to
Battery Inverter
CAN cables (3.5m) (C)

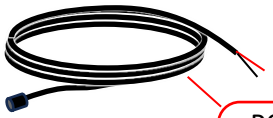

PCS-COM

Battery Cabinet to Battery
Inverter RS485 cable (3.5m) (D)

PE cable (0.7m) (E)

Battery Cabinet to BUI100
AC Auxiliary Cable (10m)

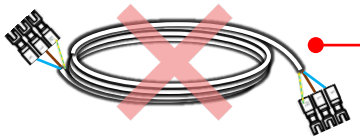

THIS PROVIDED CABLE
SHOULD NOT BE USED

Battery Cabinet to BUI100
Modbus TCP

THIS PROVIDED CABLE
SHOULD NOT BE USED

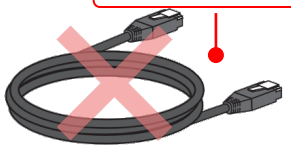

Battery Cabinet
Wiring Duct (G)

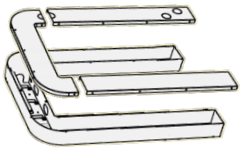

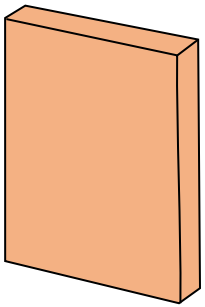

PAY ATTENTION!
All Cables are marked
with a designation label

Forklift Slots Covers (x4) (Y)
(Outside Accessories Box)

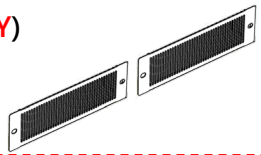

Battery Cabinet Package Contents (Inside Battery Cabinet)

Fire Clay (x2) (H)

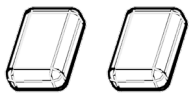

Corrugated Plastic Tube∅34.5 mm (I)

Corrugated Plastic Tube∅21 mm (J)

Battery Inverter Package Contents

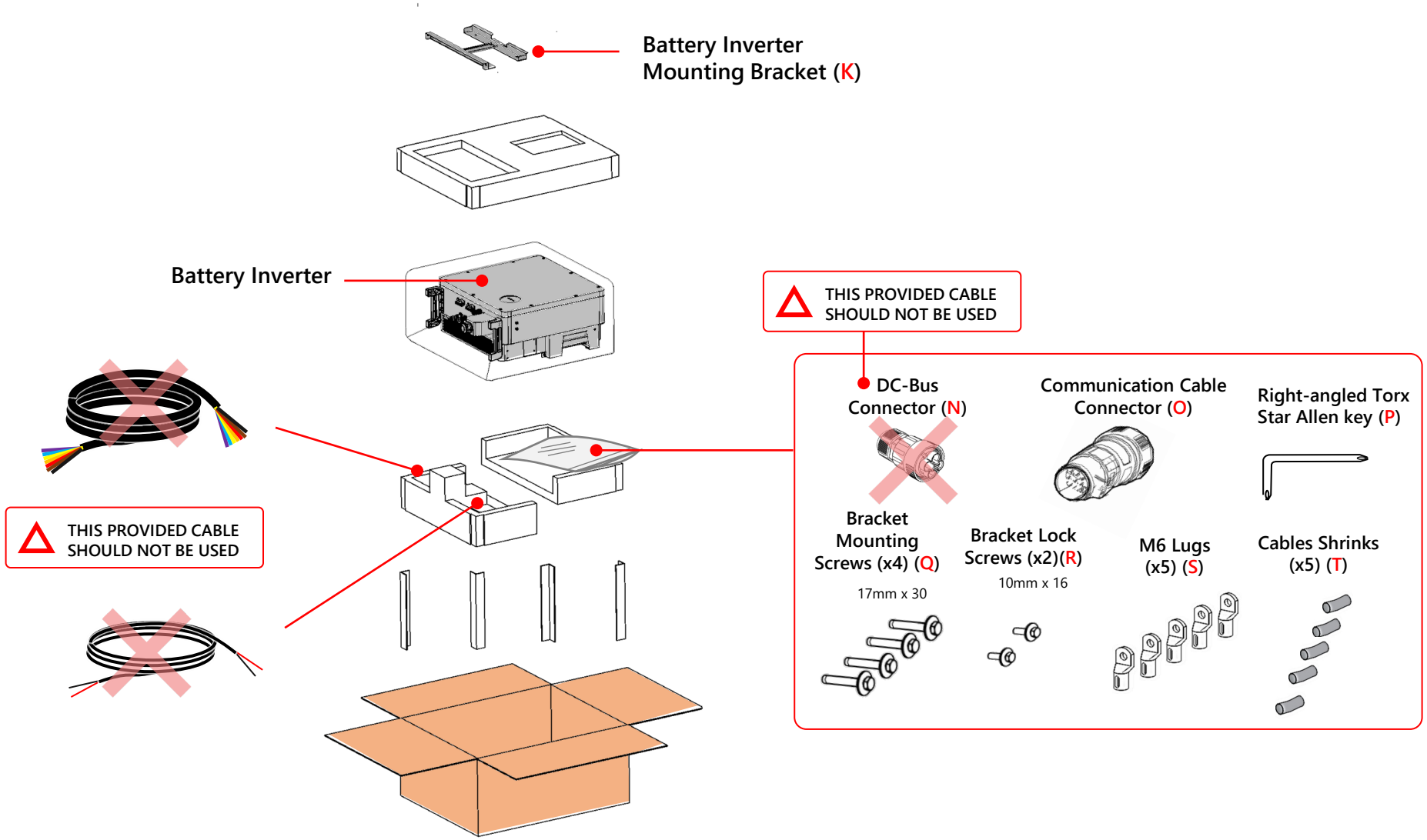

Mounting the Battery Inverter onto Battery Cabinet

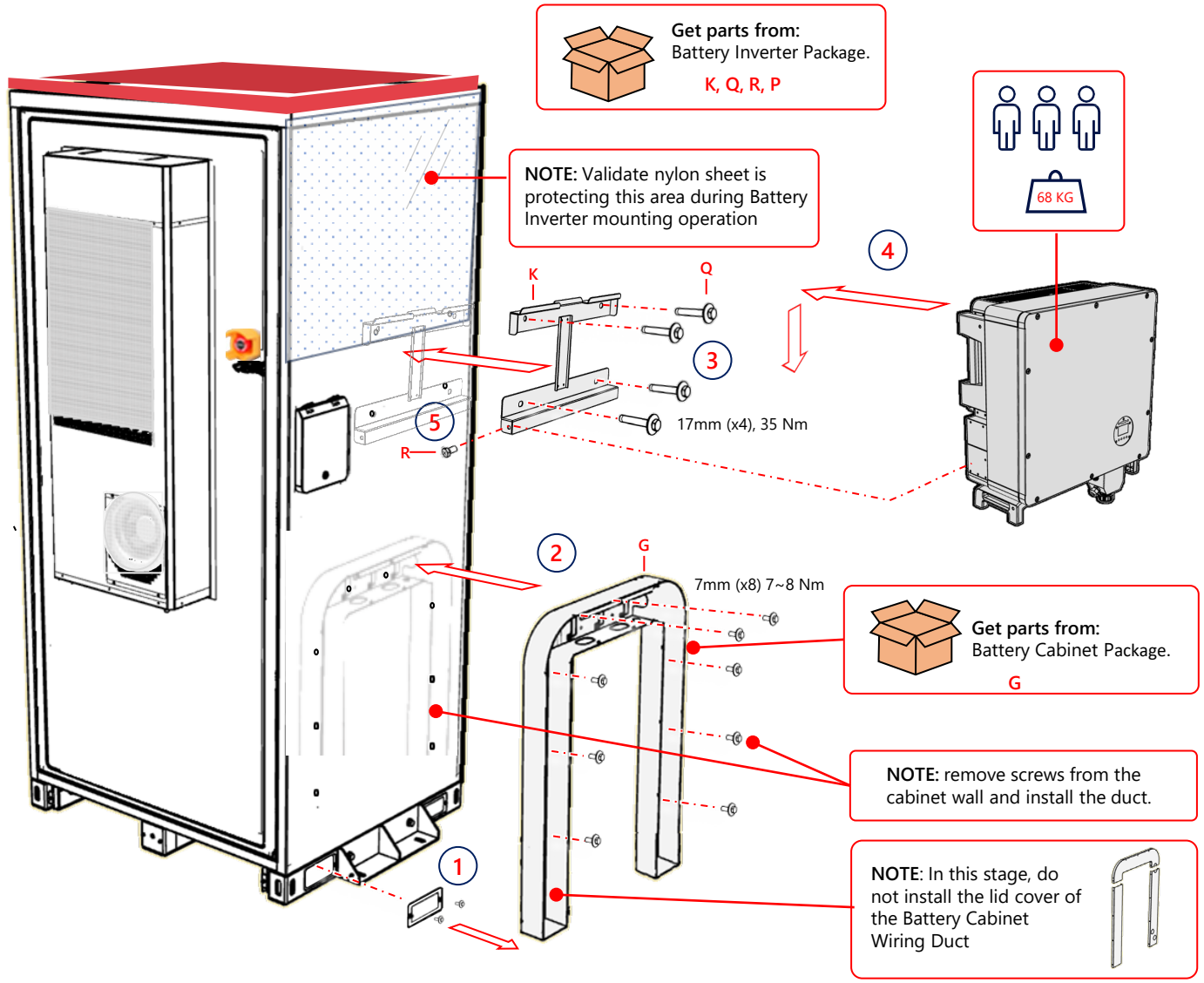

Battery Cabinet & Battery Inverter PE Wiring Management

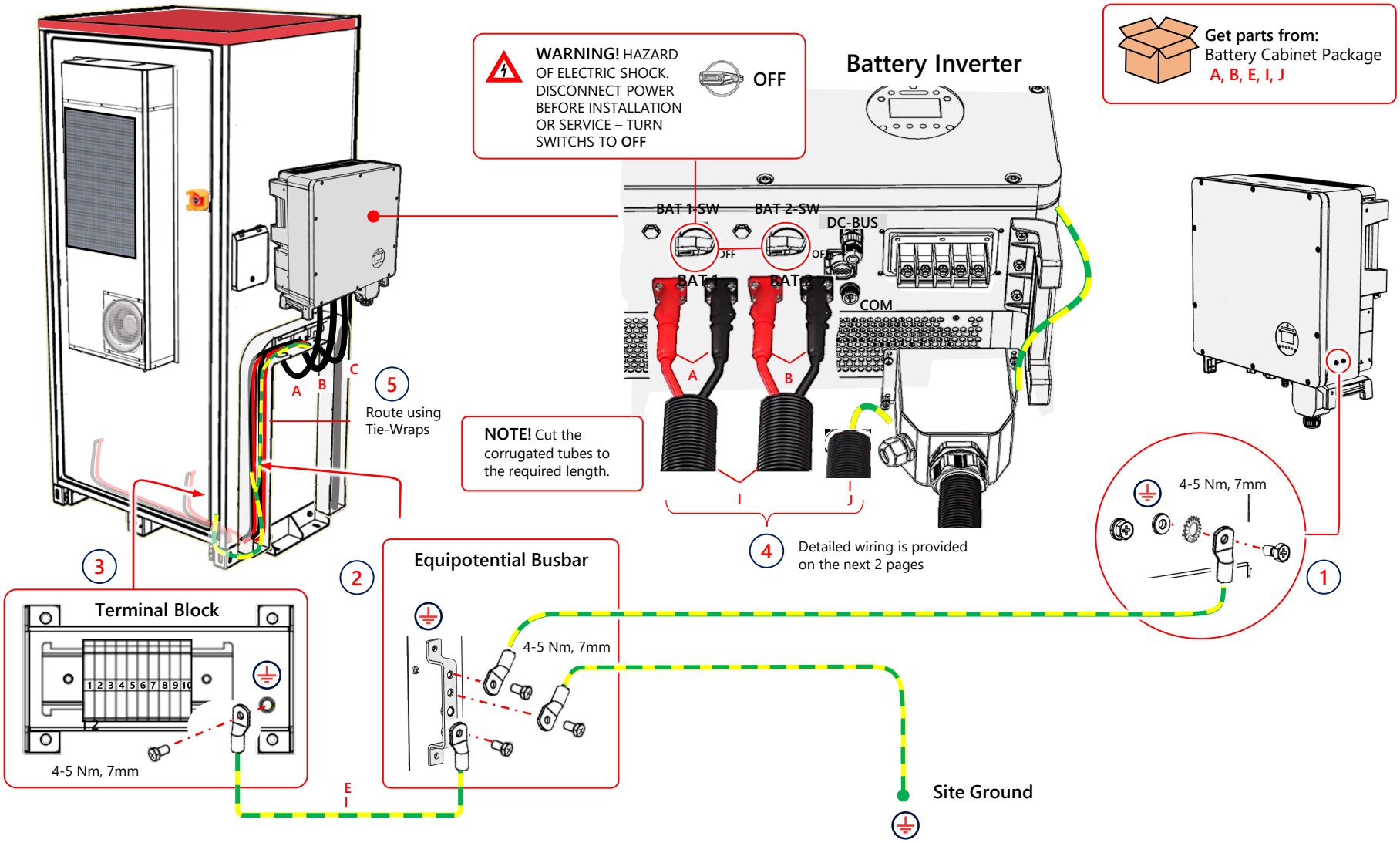

Wiring DC Power between Battery Cabinet and Battery Inverter

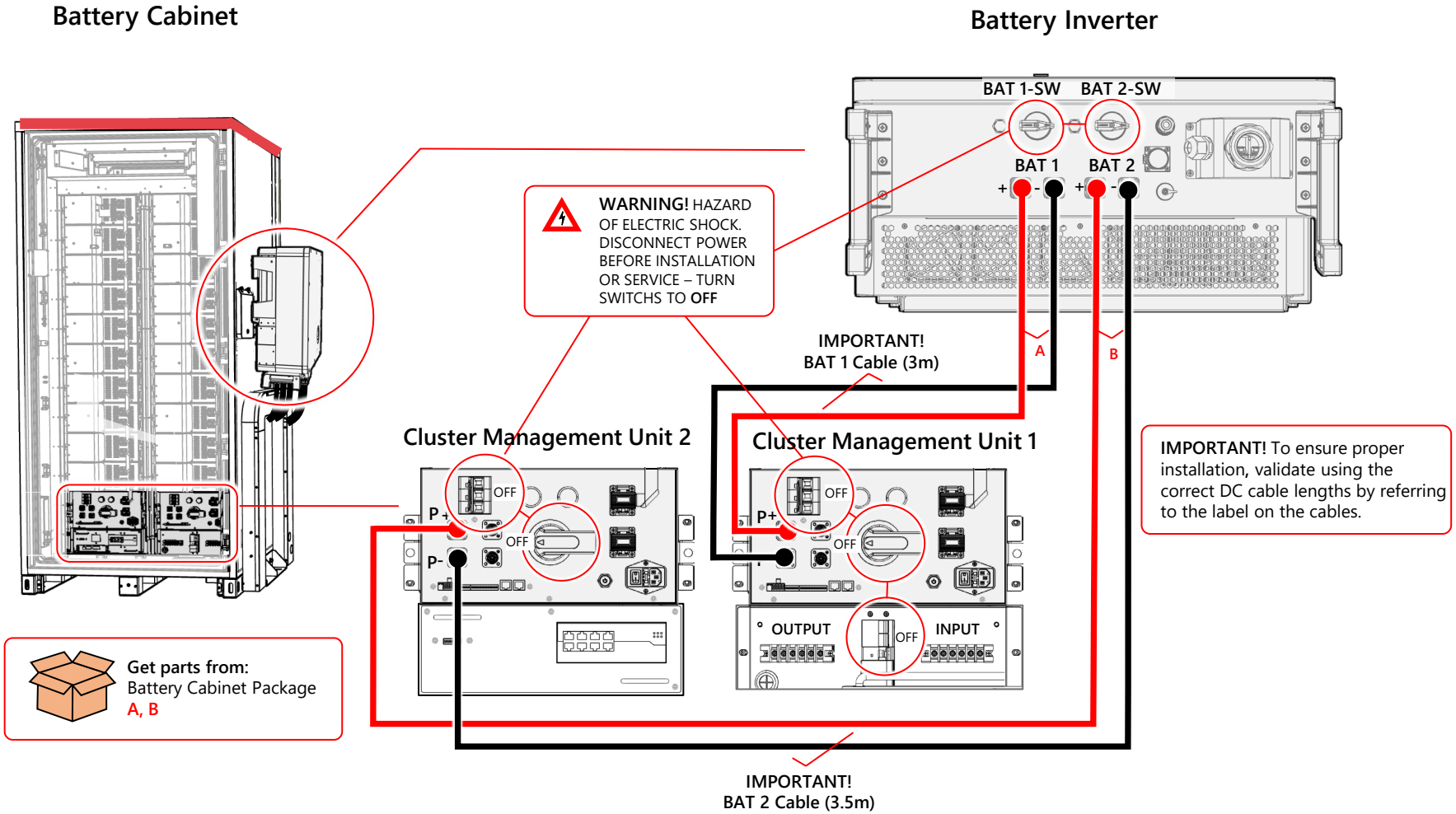

Wiring AC Power to Battery Inverter

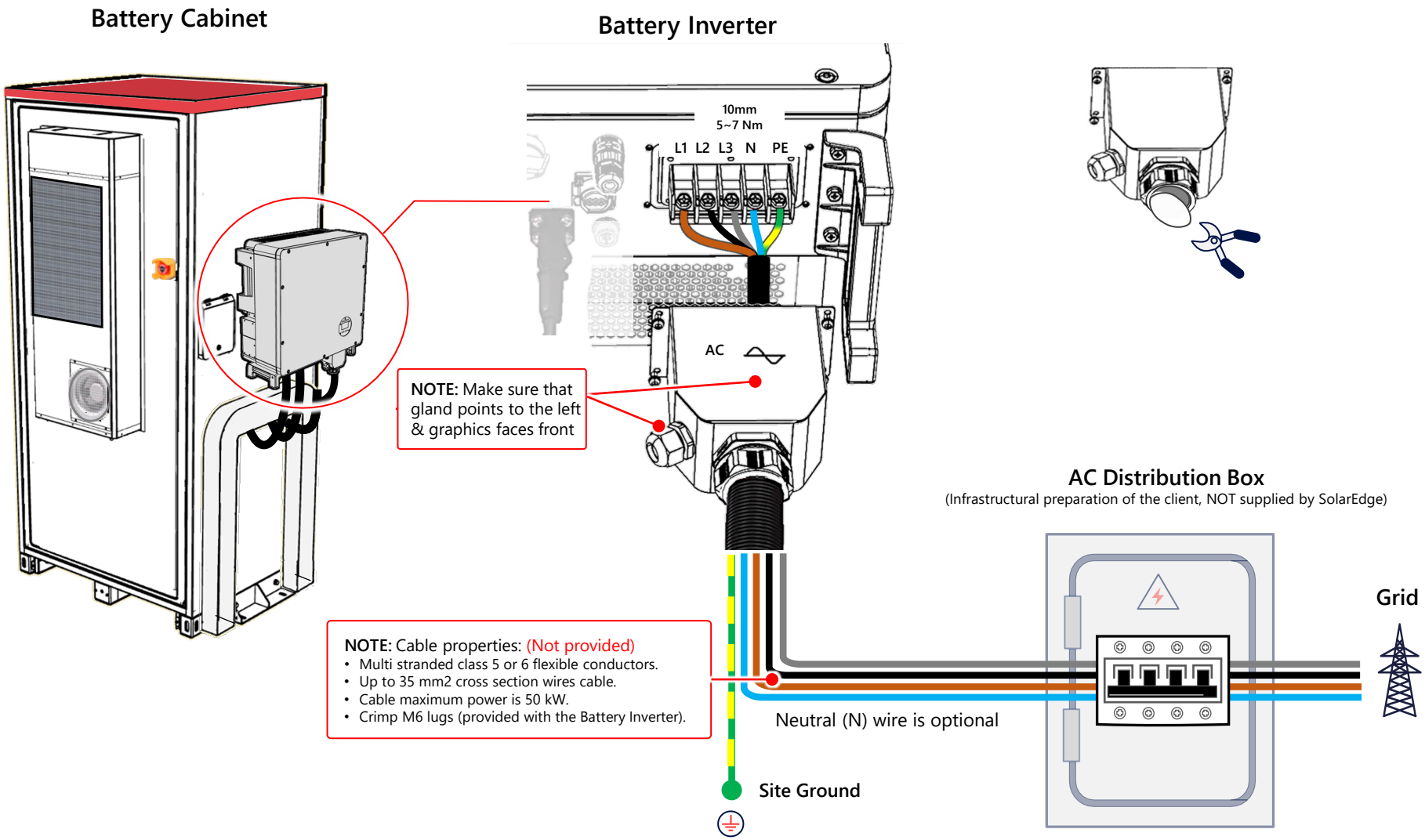

Wiring Auxiliary AC Power to Battery Inverter

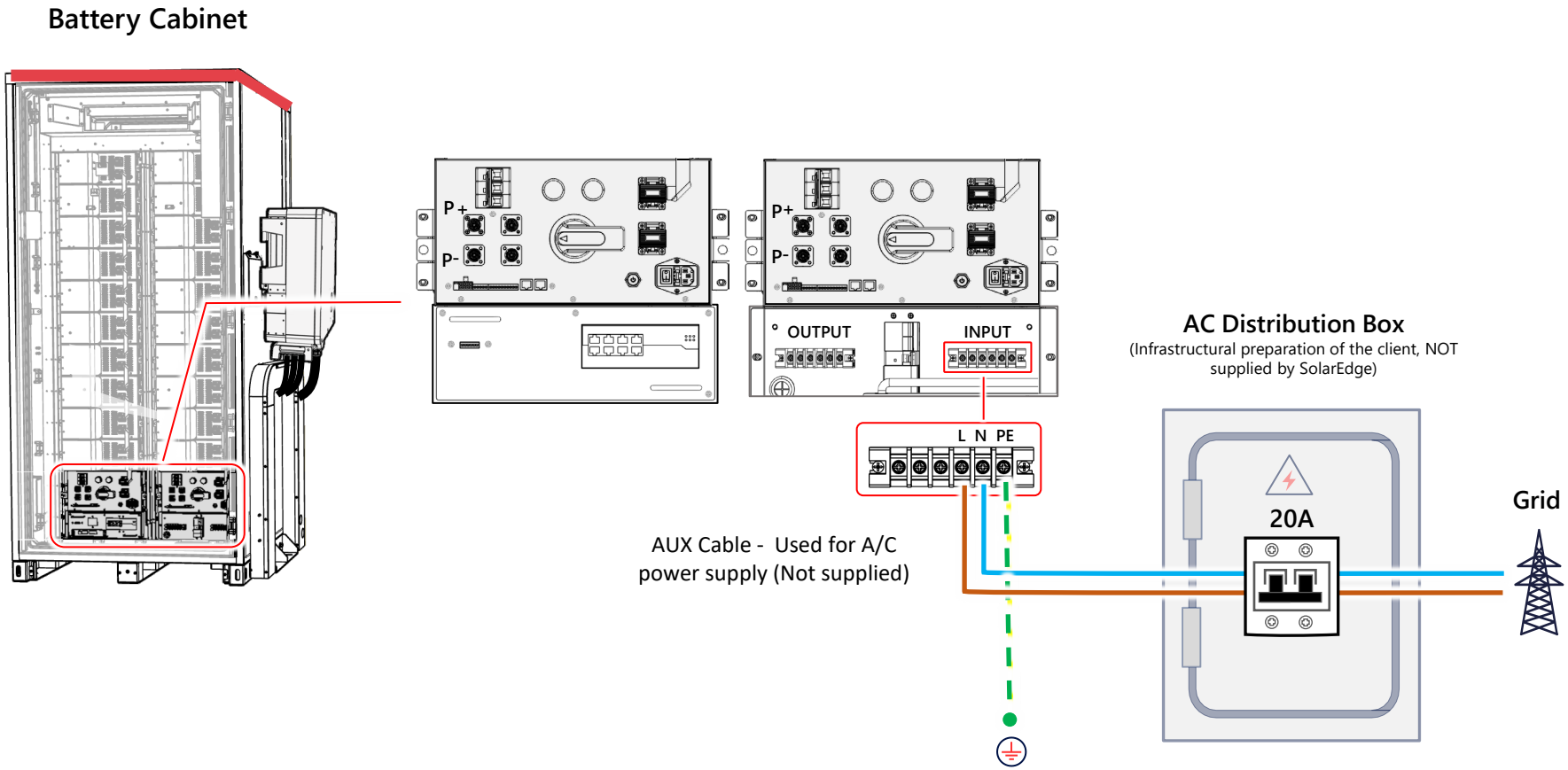

Wiring Internal Cabinet Communication

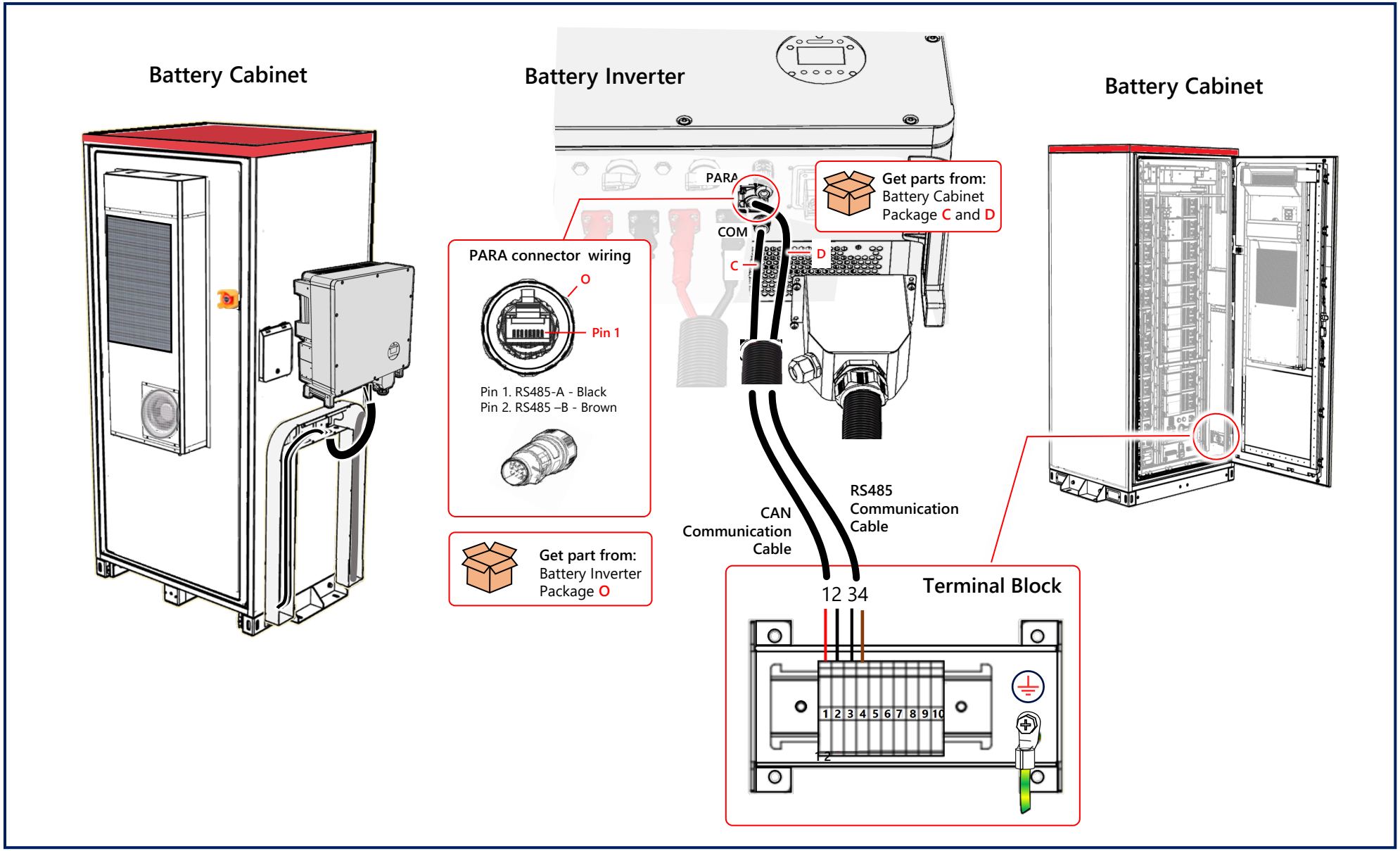

Wiring External Communication

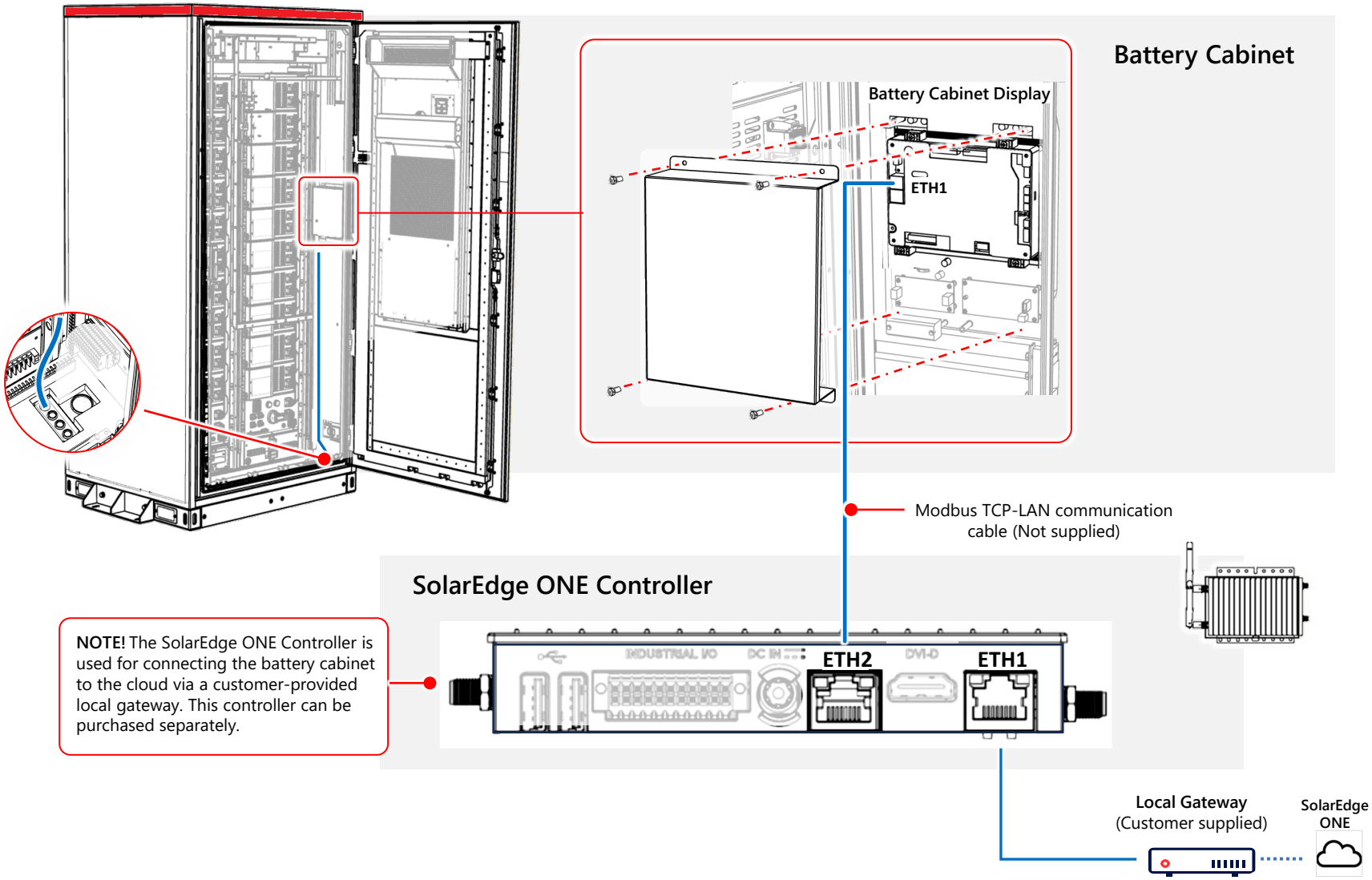

Sealing and Closing Wiring Duct Lid and Panels

IMPORTANT! Use fire clay to block the cable gaps and seal un-routed wiring holes.

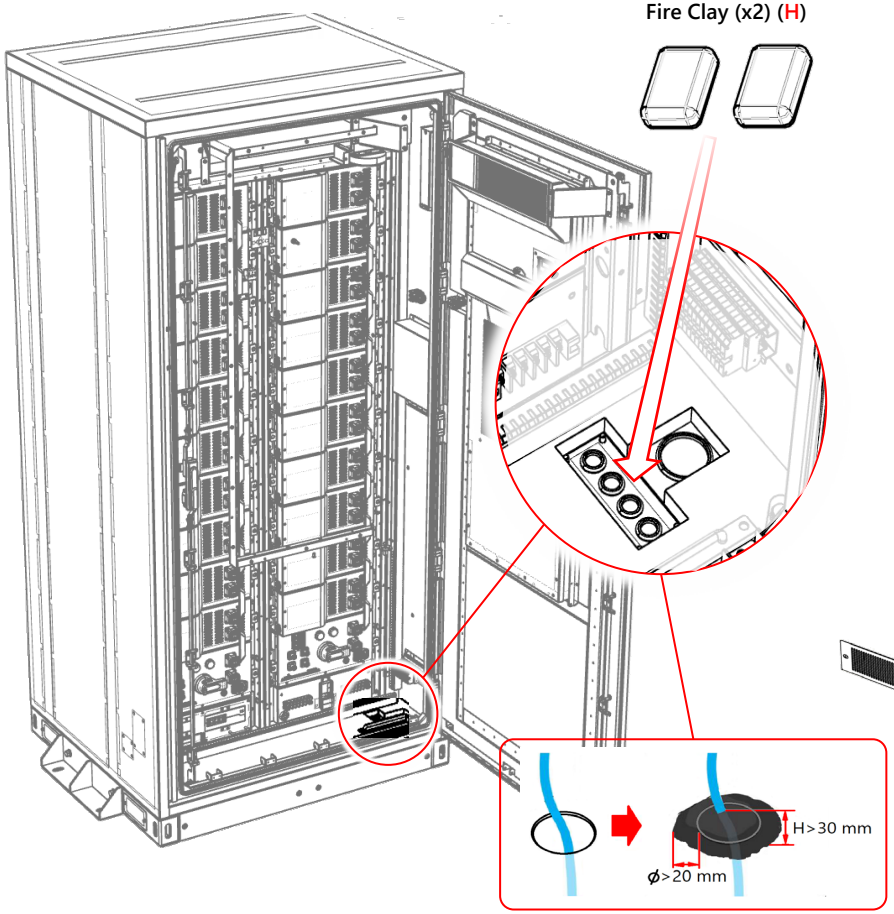

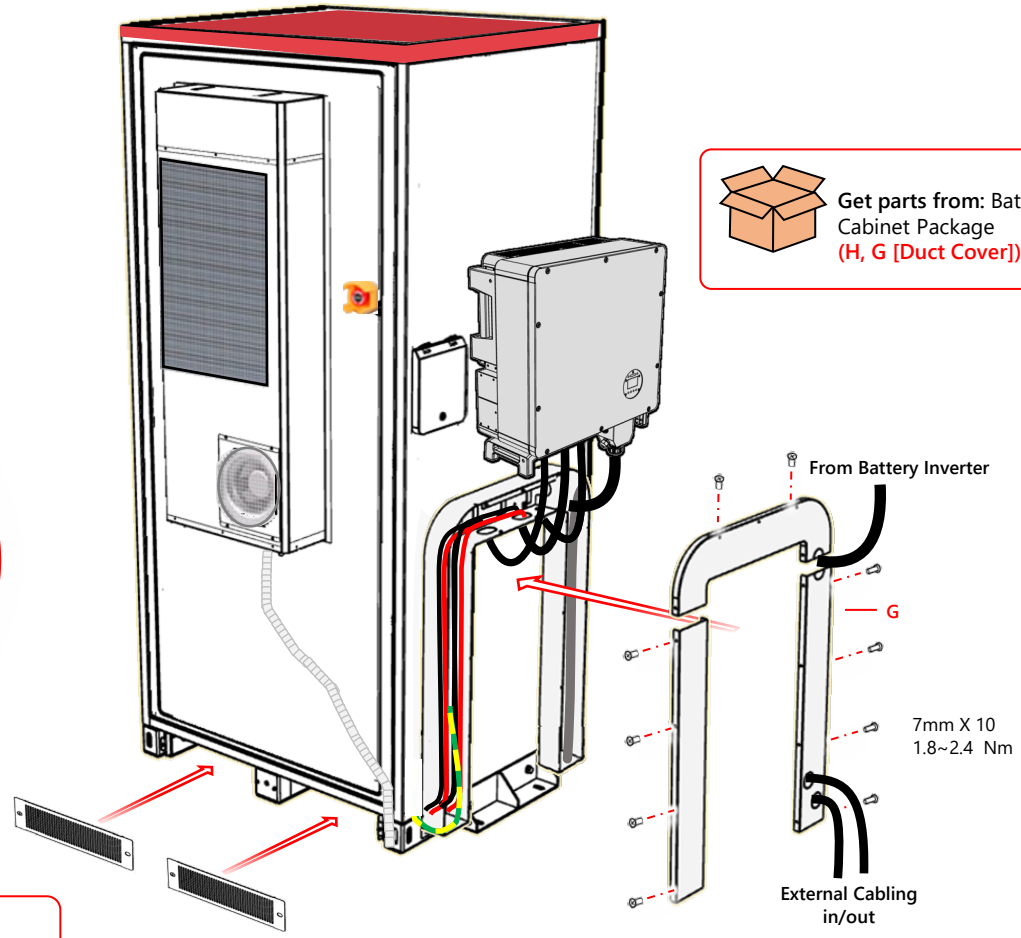

Power Up Sequence

Follow the numbered steps to power up the system

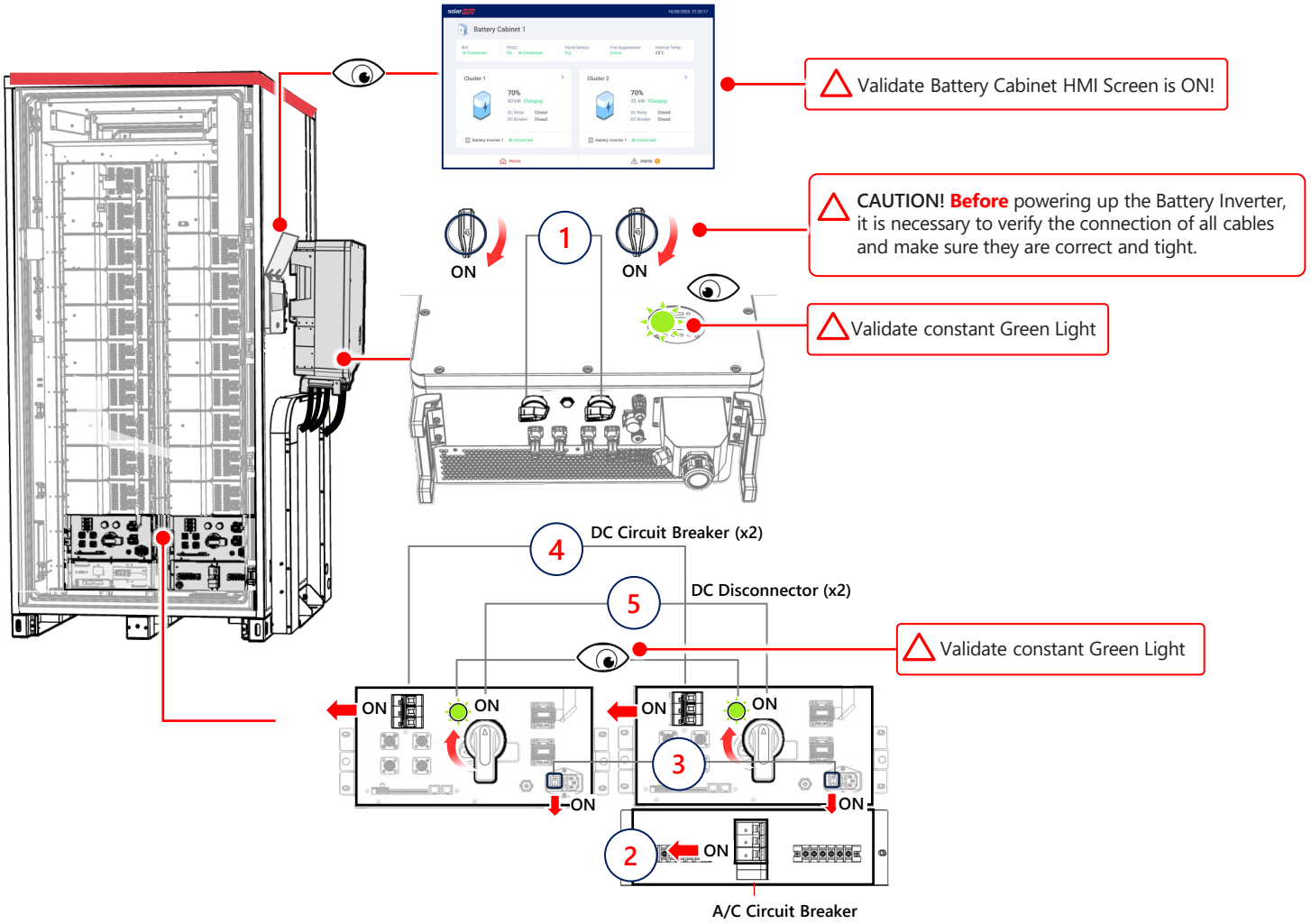

Appendix A
Construction Details

Battery Cabinet Steel Frame Production Guidelines

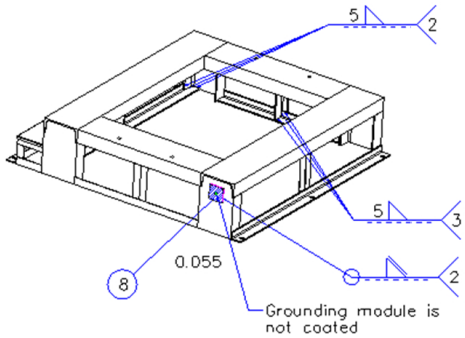

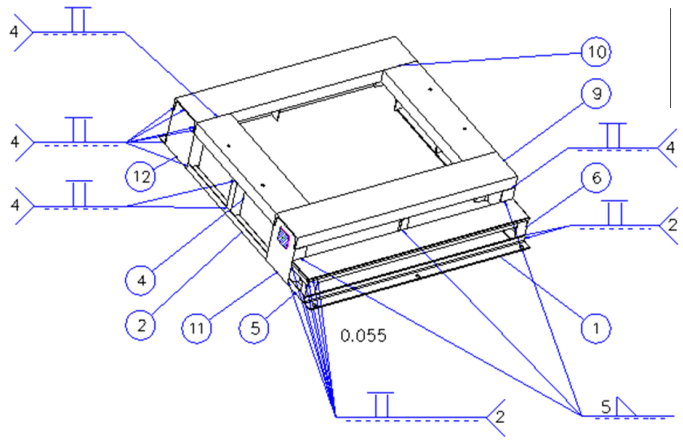

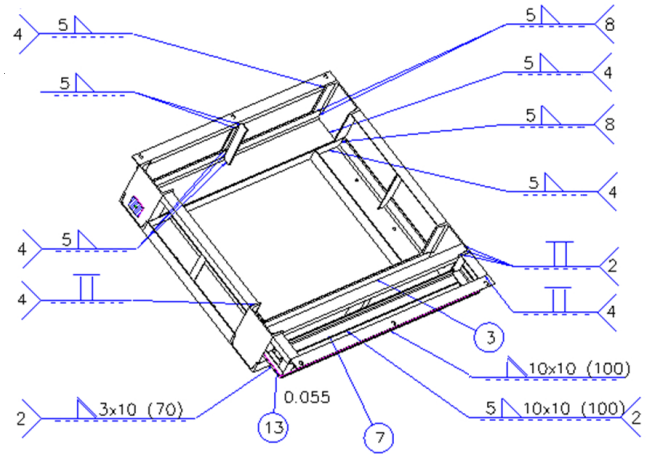

No	Part Name	qty
13	footboard	1
12	U-steel D	2
11	U-steel C	2
10	U-steel B	2
9	U-steel A	2
8	Stainless steel grounding module	2
7	Unequal Angle steel G	2
6	Unequal Angle steel F	2
5	Unequal Angle steel	4
4	Unequal Angle steel D	4
3	Unequal Angle steel C	1
2	Unequal Angle steel	2
1	Unequal Angle steel A	2

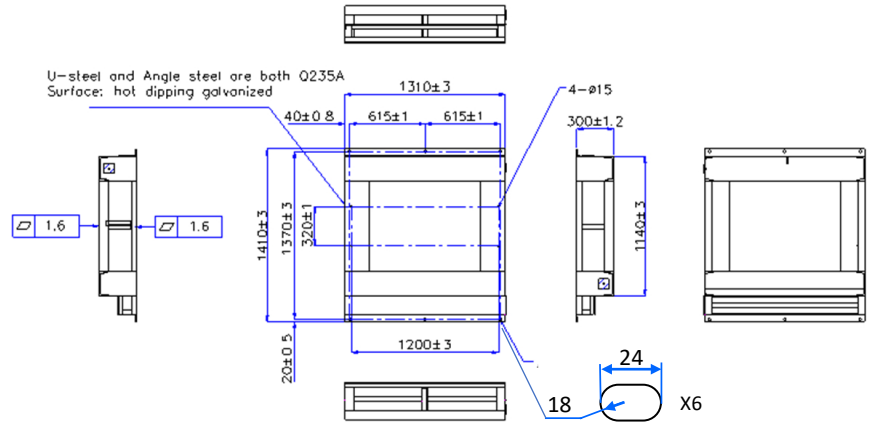

Technical Requirements:

1. Solid welding, no virtual welding.
2. After welding, except for welding slag, the outer surface of the parts is polished and smooth.
3. Spray protection according to the requirements of the drawing, all stud end faces and threads need spray protection.
4. No dimensioned tolerance according to GB/T 1804-M processing.
5. The unmarked position tolerance shall be executed in GB/T 1184-K class.
6. With* number is an important size, need to focus on inspection.
7. For other dimensions not specified, refer to the 2D/3D drawing.

Battery Cabinet Concrete Pad Guidelines

IMPORTANT!

1. Battery Cabinet must be installed on a reinforced concrete platform base.
2. The concrete pad shall be able to support the weight of the cabinets and to ensure their stability.
3. When designing and manufacturing the embedded steel plates for the battery cabinet, it is necessary to consider that there must be a reliable connection (reinforcement hook) between the embedded steel plate and the concrete base.
4. Battery Cabinet concrete pad minimum carrying capacity shall be 0.8MPa, it is necessary to consider the influence of actual local environmental factors.
5. When molding the concrete pad, it shall protrude below the ground as minimum of 400 mm.
6. The height of the concrete pad above the ground shall be at least 300 mm.
7. Concrete base surface smoothness shall be ≤ 3mm.
8. The upper surface tolerance of the foundation shall be ±5mm.
9. The concrete pad shall prevent rainwater accumulation on top of it & drainage measures must be taken in the cable trench to prevent water accumulation in the cable trench.

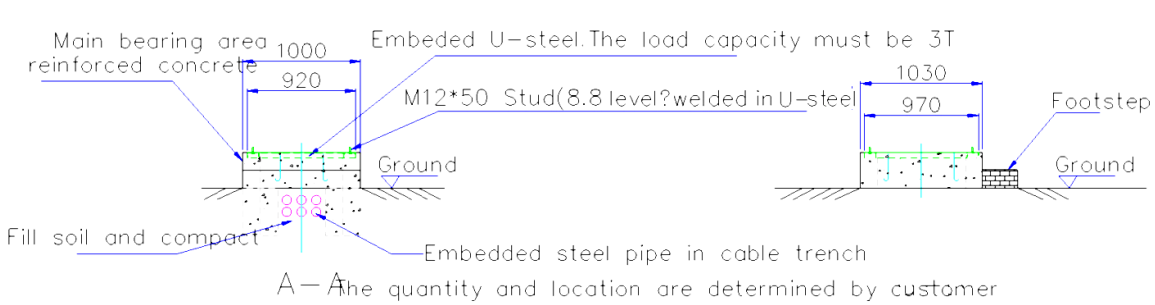

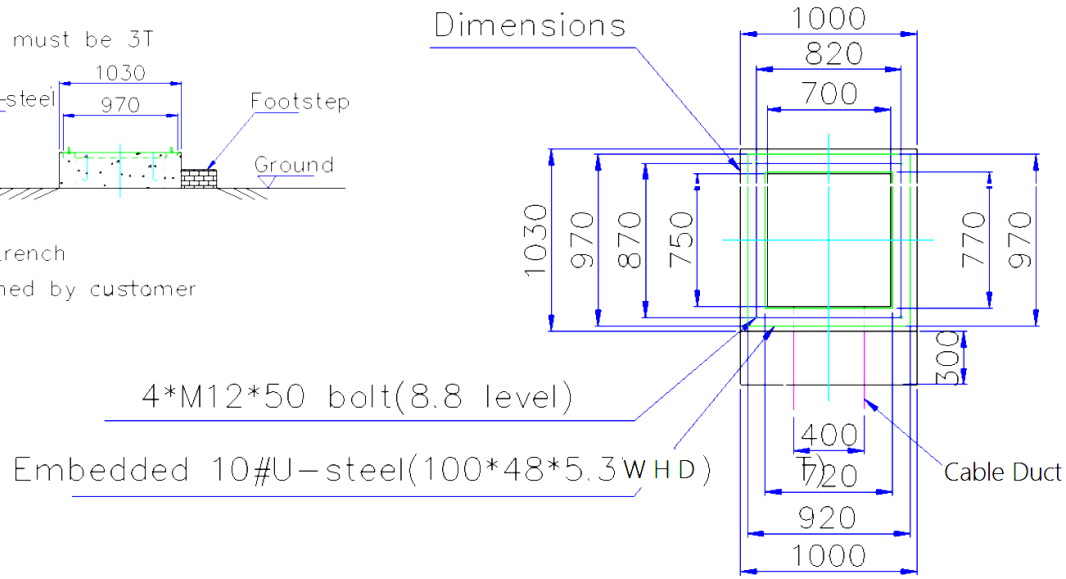

Concrete Pad with pre-integrated studs

Support Contact Information
If you have technical problems concerning SolarEdge products, please contact us:
https://www.solaredge.com/service/support