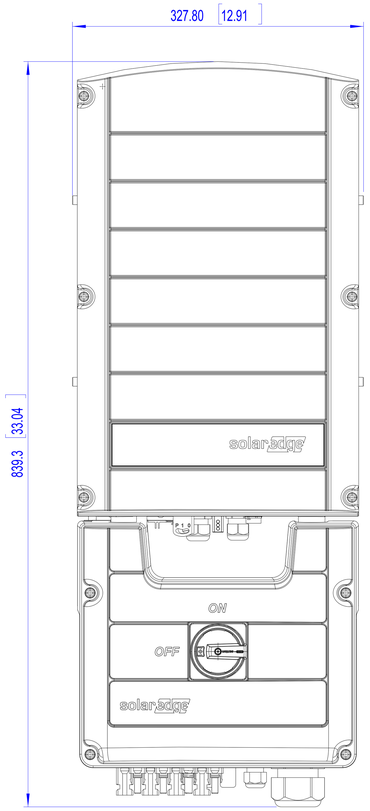

A

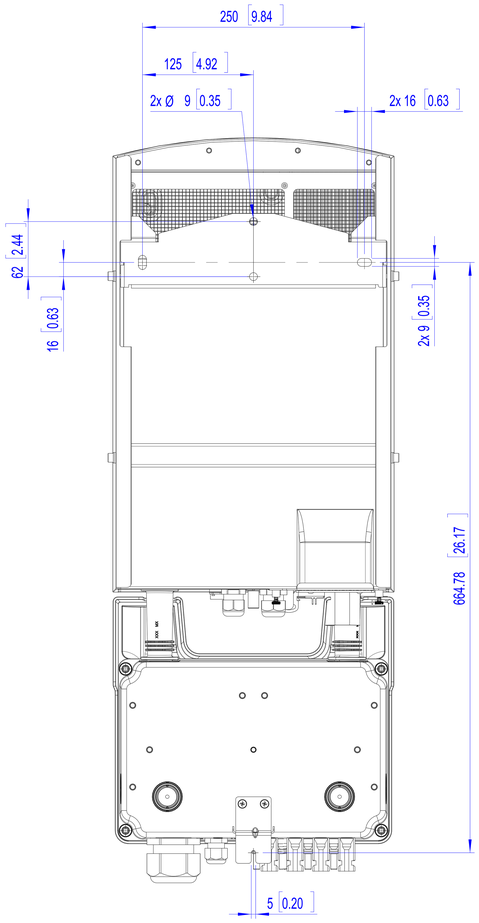

REAR VIEW, MOUNTING HOLES

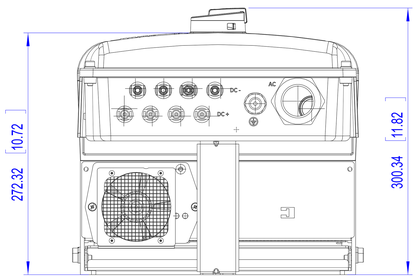

VIEW A

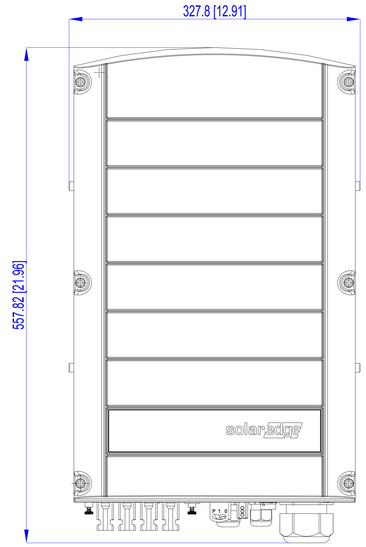

A

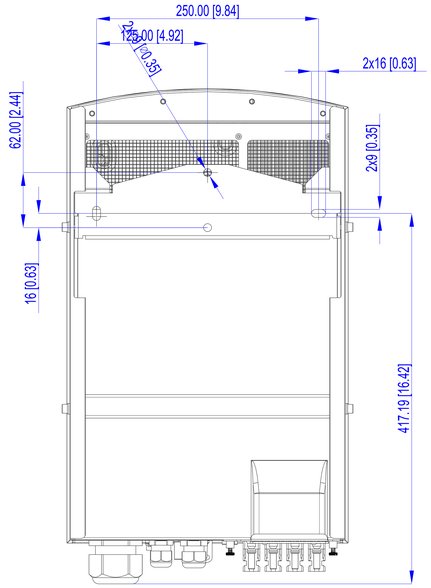

REAR VIEW, MOUNTING HOLES

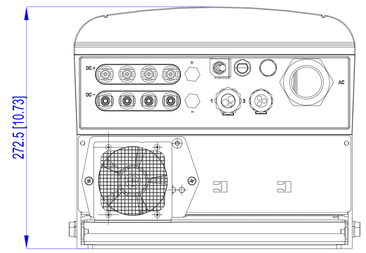

VIEW A

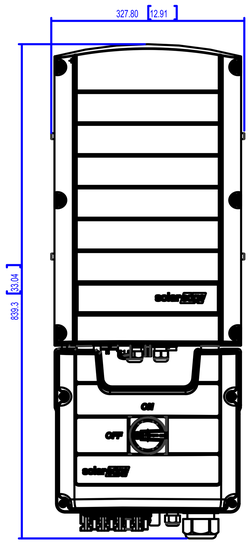

A

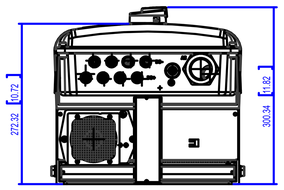

VIEW A

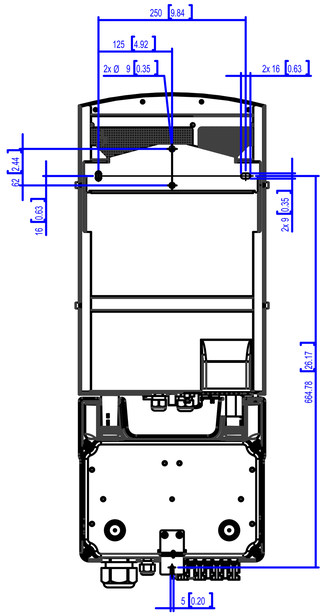

REAR VIEW, MOUNTING HOLES

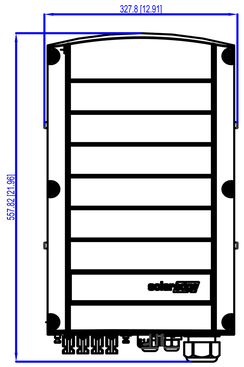

A

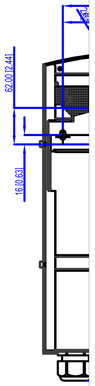

REAR V

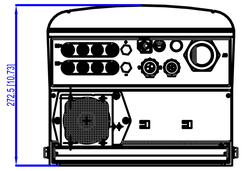

VIEW A

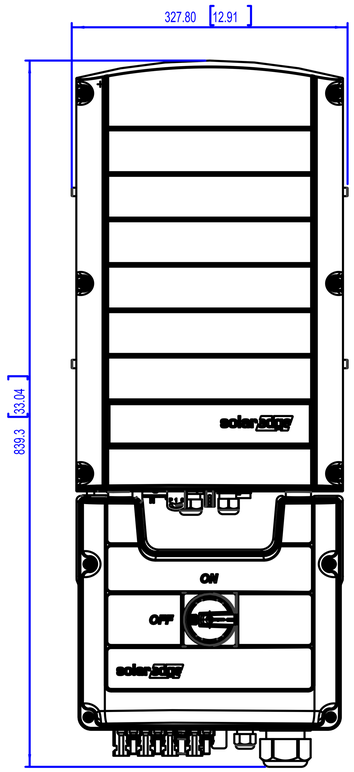

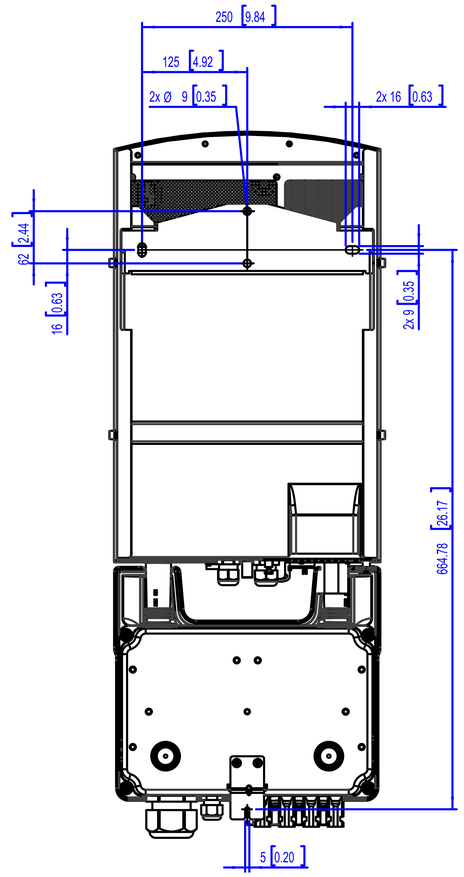

REAR VIEW, MOUNTING HOLES

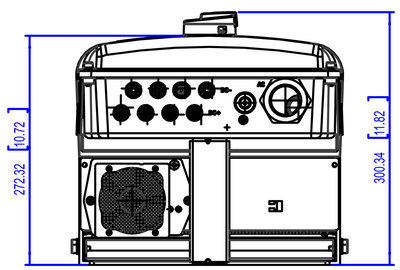

VIEW A