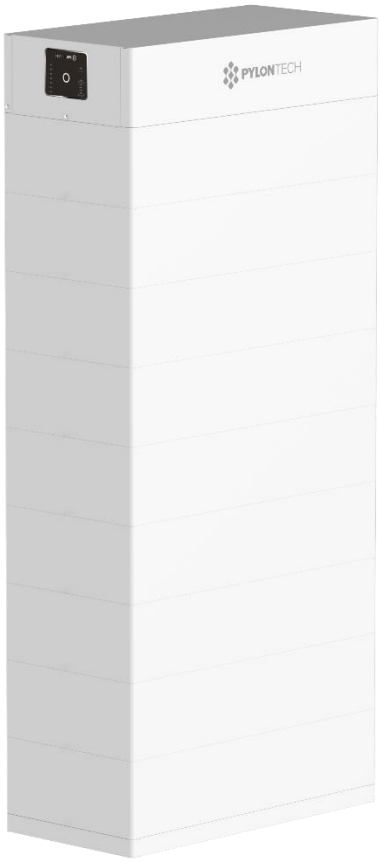

Lithium Iron Phosphate (LFP)
Energy Storage System
User Manual

Information Version: 1.2

5PMPA08-20096

Legal Information

Copyright©2026 Pylon Technologies Co., Ltd. All rights reserved.

Any reproduction or distribution of this manual or any part of this manual, or any uploading of this manual to a third-party website, in any form by any means, without the prior written consent of Pylon Technologies Co., Ltd., is prohibited.

Disclaimer

The manual contains instructions for the use of the product. All the pictures and charts in this manual are for description and explanation only. Pylon Technologies Co., Ltd. reserves the right to change the information in the manual which is subject to change without further notice.

Please read this manual carefully before using the product and keep this manual for further reference. Failure to use the product in accordance with the manual may result in serious injuries, property damages and may void the warranty, for which Pylon Technologies Co., Ltd. shall not be liable.

Pylon Technologies Co., Ltd. makes no representations or warranties express or implied, with respect to all the information in this manual.

In the event of any conflicts between this manual and the applicable law, the latter prevails.

The final interpretation of this manual belongs to Pylon Technologies Co., Ltd.

About this Manual

Purpose

This manual describes the Reefmagic(-Pro) from Pylontech in terms of its overview, installation, commissioning, maintenance, etc. Please read this manual before installing the battery and follow the instructions carefully during installation. In case of any confusion, please contact Pylontech immediately for advice and clarification (Contact information can be found on the back cover of the manual).

Explanation of Symbols

Symbol	Description
⚠ DANGER	**Danger**: Indicates a hazard with a high level of risk which, if not avoided, will result in death or serious injury.
⚠ WARNING	**Warning**: Indicates a hazard with a medium level of risk which, if not avoided, could result in death or serious injury.
⚠ CAUTION	**Caution:** Indicates a hazard with a low level of risk which, if not avoided, could result in minor or moderate injury.
NOTICE	**Notice**: Indicates a potentially hazardous situation which, if not avoided, could result in equipment damage, data loss, performance deterioration, or unanticipated results. NOTICE is used to address practices not related to personal injury.

Abbreviations

Abbreviation	Designation
Pylontech	Pylon Technologies Co., Ltd.
QC	Quality Control
BMS	Battery Management System
PCS	Power Conversion System
SOC	State of Charge
SOH	State of Health
UPS	Uninterruptible Power Supply
BESS	Battery Energy Storage System
EMS	Energy Management System

Contents

Legal Information ..... **I**

About this Manual ..... **II**

Purpose II

Explanation of Symbols II

Abbreviations III

Contents ..... **IV**

1 Safety **1**

1.1 Label Description 1

1.2 Personal Requirements 2

1.3 General Safety 2

1.4 Safety Instructions Before Connecting the Battery 5

1.5 Safety Instructions in Using the Battery 5

2 System Introduction **6**

2.1 System Description 6

2.1.1 System Overview 6

2.1.2 Heating Function 7

2.1.3 Single String System Specifications 9

2.1.4 Multi-string System Parameters (Maximum 10 Strings per System) 11

2.2 Battery Module 12

2.2.1 Battery Module Specifications 12

2.2.2 Capacity Expansion 13

2.3 Control Module 14

2.3.1 Control Module Specifications 14

2.3.2 Control Module Display Panel 15

2.3.3 Control Module Interface Panel 19

2.4 System Diagram 25

3 Installation **26**

3.1 Checking Before the Installation 26

3.2 Preparing Tools and Instruments 28

3.3 Selecting the Installation Sites 29

3.3.1 Working Environment Requirements 29
3.3.2 Installation Space Requirements 30
3.3.3 Installation Foundation Requirements 30
3.4 System Installation 31
3.4.1 Mounting the Battery Rack Base 31
3.4.2 Installing the Battery Module onto the Base 32
3.4.3 Battery Modules and Control Module (BMS) Pile up 33
3.4.4 Installing the Anti-Toppling Brackets for the System 34
4 Cable Connection 36
4.1 Checking Cables 36
4.2 Grounding Cables 38
4.3 Multi-string Cable Connections 39
4.3.1 Electrical Wiring 39
4.3.2 Communication Cable Connections of Master and Slave Battery Strings 41
5 Commissioning 42
5.1 System Turning On 42
5.1.1 Single String System Turning On 42
5.1.2 Multi-strings System Turning On 44
5.2 System Debug 45
6 Maintenance 46
6.1 System Turning Off 46
6.2 Battery Maintenance 47
6.3 Troubleshooting 48
6.4 Replacement of Main Components among the BESS 50
6.4.1 Replacement of Battery Module 50
6.4.2 Replacement of Control Module 51
7 Shipment and Storage 53
7.1 Shipment 53
7.2 Storage 53
8 Disposal 54
Annex 1: Installation and System Turn-on Process List 55

Annex 2: System Turn-off Process List..... 56

1 Safety

1.1 Label Description

Icon	Meaning	Icon	Meaning
	Read the manual before installing and operating the battery system.		Keep away from children.
	General warning label indicating potential hazards.		Recycle label.
	Warning: electric shock!		Label for Waste Electrical and Electronic Equipment (WEEE) Directive (2012/19/EU).
	Warning: flammable materials.		The system meets the requirements of the applicable EU directives.
	Do not connect the positive and negative reversely.		The IEC certificate label for Safety by TÜV Rheinland.
	Keep away from flame or ignition sources.		

1.2 Personal Requirements

Qualified personnel must have the following skills:

- Training in the installation and commissioning of the electrical system, as well as the dealing with hazards.
- Knowledge of the manual and other related documents.
- Knowledge of the local regulations and directives.

1.3 General Safety

Declaration

This system is only operated by authorized personnel. Read all safety instructions carefully prior to any work and follow these instructions at all times when working with the system.

Incorrect operation or work may cause:

- Injury or death to the operator or a third party.
- Damage to the system hardware and other properties belonging to the operator or a third party.

General Requirements

⚠ DANGER

Danger: Batteries deliver electric power, resulting in burns or a fire hazard when short circuit or incorrect installment occurs.

⚠ DANGER

Danger: Lethal voltages are present in the battery terminals and cables. Severe injuries or death may occur if you touch the cables and terminals.

⚠ DANGER

Danger: Battery strings will produce high voltage DC power and can cause a lethal voltage and an electric shock. Only qualified personnel can perform the wiring of the battery strings.

⚠ WARNING

Warning: DO NOT open or deform the battery module, otherwise the product will be out of warranty scope.

⚠ WARNING

Warning: Whenever operating the battery system, wear suitable personal protective equipment (PPE) such as rubber gloves, rubber boots and goggles.

⚠ WARNING

Warning: For this system, working temperature is -10°C~ 55°C and the optimum temperature is: 18°C~ 28°C. Out of the working temperature range may cause the battery system over/low temperature alarm or protection which will further lead to the cycle life reduction. It will affect the warranty terms as well.

⚠ WARNING

Warning: For battery installation, the installer shall refer to NFPA70 or similar local installation standard for operation.

⚠ WARNING

Warning: Pulling out the connectors while the system is working could lead to battery system damage or personal injury. Do not pull out the connectors while system is in operation. De-energize all multiple power sources and verify that there is no voltage.

⚠ WARNING

Warning: Please keep the battery away from radiation environment.

⚠ WARNING

Warning: Please avoid installing batteries in earthquake-prone areas.

⚠ WARNING

Warning: Please keep the battery away from corrosive gases and liquid areas.

⚠ WARNING

Warning: In the battery installation area, please reserve a safe escape route and indicate it with a symbol.

⚠ WARNING

Warning: During transportation, box trucks are used and the products are wrapped with Protective foam to prevent damage from vibration.

⚠ WARNING

Warning: Reefmagic(-Pro) is not equipped with a fire alarm system, please prepare a sound-light alarm in the system installation area. Minimum loudness of 85dB(A) in accordance with DINEN14604, measured at a distance of 3m, but not more than 110dB(A). The frequency is limited to a maximum of 3.5kHz.

⚠ CAUTION

Caution: Improper settings or maintenance can permanently damage the battery.

⚠ CAUTION

Caution: Incorrect inverter parameters will lead to the premature aging of battery or battery system failure.

⚠ CAUTION

Caution: Battery needs to be recharged within 12 hours, after fully discharged.

1.4 Safety Instructions Before Connecting the Battery

⚠ CAUTION

Caution:

- After unpacking, please check product and packing list first, if the product is damaged or lack of parts, please contact the local retailer.
- Before installation, be sure to cut off the grid power and make sure the battery is in the switched-off mode.
- Wiring must be correct, do not mistake the positive and negative cables, and ensure no short circuit with the external device.
- DO NOT connect the battery with AC power directly.
- Battery system must be well grounded and the resistance must be less than 100mΩ.
- Please ensure the electrical parameters of battery system are compatible to related equipment.
- Keep the battery away from water and fire.

1.5 Safety Instructions in Using the Battery

⚠ CAUTION

Caution:

- If the battery system needs to be moved or repaired, the power must be cut off and the battery is completely shut down in advance.
- DO NOT connect the battery with other different type of battery.
- DO NOT let the batteries work with faulty or incompatible inverter.
- DO NOT disassemble the battery (QC tab removed or damaged).
- In case of fire, only dry powder fire extinguisher can be used. DO NOT use liquid fire extinguishers.

2 System Introduction

2.1 System Description

2.1.1 System Overview

Reefmagic(-Pro) is a high voltage battery storage system based on lithium iron phosphate battery, which is one of the new energy storage products developed and produced by Pylontech. It can be used to provide reliable power for various types of equipment and systems. The system enables multiple strings parallel operation feature, which provides tremendous flexibility in system design and configuration. The system is especially suitable for those application scenarios which require flexible capacity extension, high power output, limited installation space, restricted load-bearing and long cycle life.

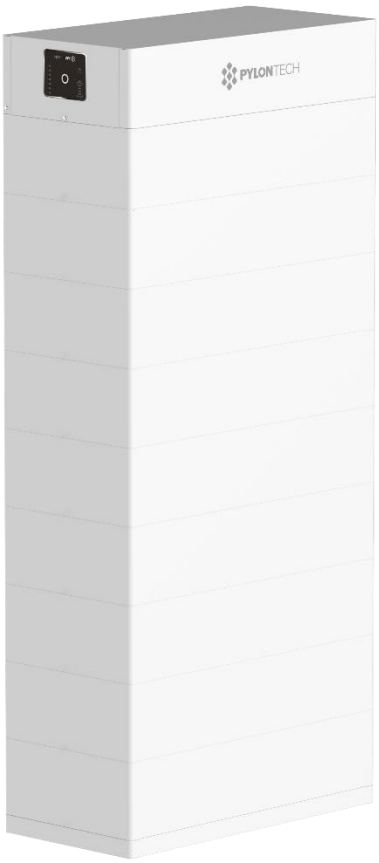

NOTE: The above picture is just for reference. The quantity of the battery modules is based on your practical system.

2.1.2 Heating Function

The Reefmagic-Pro battery is equipped with a heating function. The relevant logic and precautions for use are as follows:

System Default Settings (Not Recommended)

The heating function of the heating model battery is enabled by default, and heating will automatically start when the heating trigger conditions are met.

The battery's default heating activation temperature is triggered when the minimum battery temperature (T_{min}) ≤ 5°C, and the default heating shutdown temperature is triggered when

T_{min} ≥ 10°C (The heating shutdown temperature can be set up to a maximum of 15°C via the App).

The default heating feature remains available 24/7.

APP Settings for Heating Function Parameters (Recommended)

The heating enable can be set. If the heating enable is set to off, the system will operate as a non-heating model battery.

The heating activation temperature and heating shutdown temperature can be customized according to customer needs. Once set successfully, the system will operate according to the set parameters.

A maximum of 3 heating time periods can be set. Once set successfully, heating will start/stop according to the set parameters. If the heating shutdown conditions are met within the set time period, heating can stop in advance.

Manual One-time Heating

The app includes a manual one-time heating option. Tap the button to start a single independent heating cycle, which will automatically terminate when the minimum battery temperature reaches 10°C.

This is a temporary function. Upon completion, the system will return to standby mode, awaiting further commands.

Logic

The priority order of energy sources for system heating is: photovoltaic, battery, mains electricity.

- If photovoltaic energy is sufficient, it will be used for battery heating.
- If photovoltaic energy is insufficient and the battery SOC ≥ 30%, battery energy will be used for heating.
- If photovoltaic energy is insufficient and the battery SOC < 30%, the battery is not allowed to discharge for self-heating, and it is necessary to request PCS inverter output for heating (Note:

Grid energy will be used in this process).

⚠ CAUTION

Caution:

- It is necessary to ensure that all batteries in the parallel system are heating model batteries, i.e., all are Reefmagic-Pro. When mixed with Reefmagic batteries, the heating function of the heating models will not take effect.
- If you do not want to use this heating function, you can disable the heating enable through the battery button or in the APP.
- The minimum allowable operating temperature of the battery is -20°C. If the battery temperature is below -20°C, the battery will not be allowed to be used, including the heating function.
- It takes only 2 hours to heat the battery from -20°C to a minimum temperature of ≥ 5°C. However, if the battery power is insufficient and the heating power output by the PCS is insufficient, the heating effect will be affected.
- When using the battery in a normal temperature environment, if the battery reports a heating function fault, the heating function can be disabled temporarily, and the battery can be used as a non-heating model.

2.1.3 Single String System Specifications

Specifications	Reefmagic(-Pro) in Single String								
Battery System Energy (kWh)	15.0	22.5	30.0	37.5	45.0	52.5	60.0	67.5	75
Battery System Voltage (VDC)	147.2	220.8	294.4	368	441.6	515.2	588.8	662.4	736
Battery System Capacity (Ah)	102								
Control Module Model	RMC1000(-Pro)								
Battery Module Model	RMB70100(-Pro)								
Battery Module Quantity (pc)	2	3	4	5	6	7	8	9	10
Battery Module Energy (kWh)	7.5								
Battery Module Voltage (VDC)	73.6								
Battery Module Capacity (Ah)	102								
Battery System Charge Upper Voltage (VDC)	163.3	244.9	326.6	408.2	489.9	571.5	653.2	734.8	816.5
Battery System Charge Current (Amps, Standard)	20								
Battery System Charge Current (Amps, Rated)	50								
Battery System Charge Current (Amps, maximum @15minutes)	55								
Battery System Discharge Lower Voltage (VDC) **	128.8	193.2	257.6	322	386.4	450.8	515.2	579.5	644
Battery System Discharge Current (Amps, Standard)	20								
Battery System Discharge Current (Amps, Rated)	50								
Battery System Discharge Current (Amps, maximum @15 minutes)	55								
Short circuit rating	6000 Amps /3 milliseconds								
Efficiency	95								

Specifications	Reefmagic(-Pro) in Single String								
(% at 0.5C-rate)									
Depth of Discharge (%)	95								
Dimensions (W × D × H, mm)	770× 380× 550	770 × 380× 720	770× 380× 890	770× 380× 1060	770× 380× 1230	770× 380× 1400	770× 380× 1570	770× 380× 1740	770× 380× 1910
Communication	Modbus RTU/CAN								
IP Rating	IP65/I								
Pollution Degree	PD3								
Weight (kg)	136	194	252	310	368	426	484	542	600
Design Life (year)	15+								
Working Temperature/ (°C) Charge	Reefmagic: 0 ~ 55 Reefmagic-Pro: -20 ~ 55								
Working Temperature/ (°C) Discharge	Reefmagic: -10 ~ 55 Reefmagic-Pro: -20 ~ 55								
Storage Temperature (°C)	-20 ~ 60								
Altitude (m)	<4,000								
Humidity (%, RH)	0 ~ 95								
Product Certificate	IEC62040-1, IEC62619, IEC63056, UN38.3, VDE								
Transfer Certificate	UN38.3								
Environmental certification	RoHS, Reach, WEEE								
Single Battery Controller Dimensions (mm)	770 (W) × 380 (D) × 170 (H)								
Single Battery Module Dimensions (mm)	770 (W) × 380 (D) × 170 (H)								
Battery Bottom Base Dimensions (mm)	770 (W) × 380 (D) × 40 (H)								

* In high (≥40°C) or low temperature (≤10°C) environment, battery system charging and discharging power will be derated per the BMS control logic to ensure operational safety.

**Rated reference value

2.1.4 Multi-string System Parameters (Maximum 10 Strings per System)

For multi-string operation, ensure that:

- The battery type in the whole system is the same.
- The battery amount of each string is the same.

Specifications	Reefmagic(-Pro) in Multi-strings				
Battery System Voltage (VDC)*	147.2/220.8/294.4/368/441.6/515.2/588.8/662.4/736				
Battery System string amount(pcs)	2	3	4	5	6
Battery System capacity (Ah)	204	306	408	510	612
Battery System Operation Current (Amps, Standard)	40	60	80	100	120
Battery System Operation Current (Amps, Rated)	80	120	160	200	240
Battery System Operation Current (Amps, maximum @15 minutes)	110	165	220	275	330
P-Combiner 3/6 Operation Current (Amps, Rated)	50**		100⁂		
P-Combiner 3/6 Operation Current (Amps, maximum @15 seconds)	80**		160⁂		

*The Battery System Voltage varies depending on battery amount in serial per string.

**The current is based on BMS theoretical operation current. If using P-Combiner 3 as the combiner box of the multi-strings` battery system wiring connection, the maximum continuous operation current is 50 Amps, maximum peak operation current is 80 Amps for 15 seconds. Please ensure that the real operation current does not exceed the combiner box power rating.

⁂The current is based on BMS theoretical operation current. If using P-Combiner 6 as the combiner box of the multi-strings` battery system wiring connection, the maximum continuous operation current is 100 Amps, maximum peak operation current is 160 Amps for 15 seconds. Please ensure that the real operation current does not exceed the combiner box power rating.

IMPORTANT: **DO NOT** use P-Combiner-HV-3/6 or similar concept of multi-strings connection method in case the multiple battery strings need to be operated independently.

2.2 Battery Module

2.2.1 Battery Module Specifications

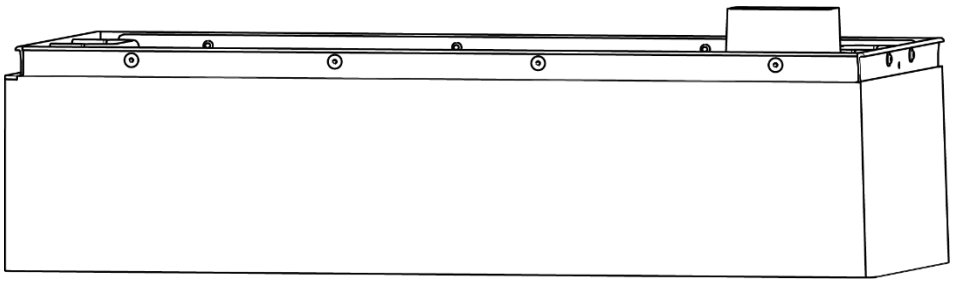

Specifications	RMB70100(-Pro)
Cell Technology	Li-ion (LFP)
Battery Module Energy (kWh)	7.5
Battery Module Voltage (VDC)	73.6
Battery Module Capacity (Ah)	102
Battery Module Serial Cell Quantity (pc)	23
Battery Cell Voltage (VDC)	3.2
Battery Cell Capacity (Ah)	102
Dimension (W × D × H, mm)	770 × 380 × 170
Weight (kg)	58 kg
Operation Life (year)	10+
Operation Cycle Life (cycle) *	8,000
Operation Temperature (°C) **	RMB70100: -10 ~ 55 RMB70100-Pro: -20 ~ 55
Storage Temperature (°C)	-20 ~ 60
Transfer Certificate	UN38.3

* Operation Cycle Life is defined based on specific operation conditions, for more details please check with Pylontech service team.

** In high(≥40°C) or low temperature(≤10°C) environment, battery system charging and discharging power will be derated per the BMS control logic to ensure operational safety.

2.2.2 Capacity Expansion

A new battery module can be added onto an existing system at any time. Please ensure that the new battery module has an equivalent OCV (Open Circuit Voltage) compared to existing modules before adding on and make a full charge of the new system. In a serial connection system, the new module, even with a higher SOH, shall follow the system worst SOH condition module to perform.

2.3 Control Module

2.3.1 Control Module Specifications

Specifications	RMC1000(-Pro)
Related Product	RMB70100(-Pro)
Controller Working Voltage (VDC)	80 - 1000
System Operation Voltage (VDC)	124.2 – 579.8
Charge Current (Amps, maximum @15 minutes)	55
Discharge Current (Amps, maximum @15 minutes)	55
Self-consumption (W)	＜16
Dimension (W × D × H, mm)	770 × 380 × 170
Weight (kg)	16
Communication Protocol	CANBUS / Modbus RTU
Operation Life (year)	10+
Operation Temperature (℃)	RMC1000: -10 ~ 55 RMC1000-Pro: -20 ~ 55
Storage Temperature (℃)	-20 ~ 60

2.3.2 Control Module Display Panel

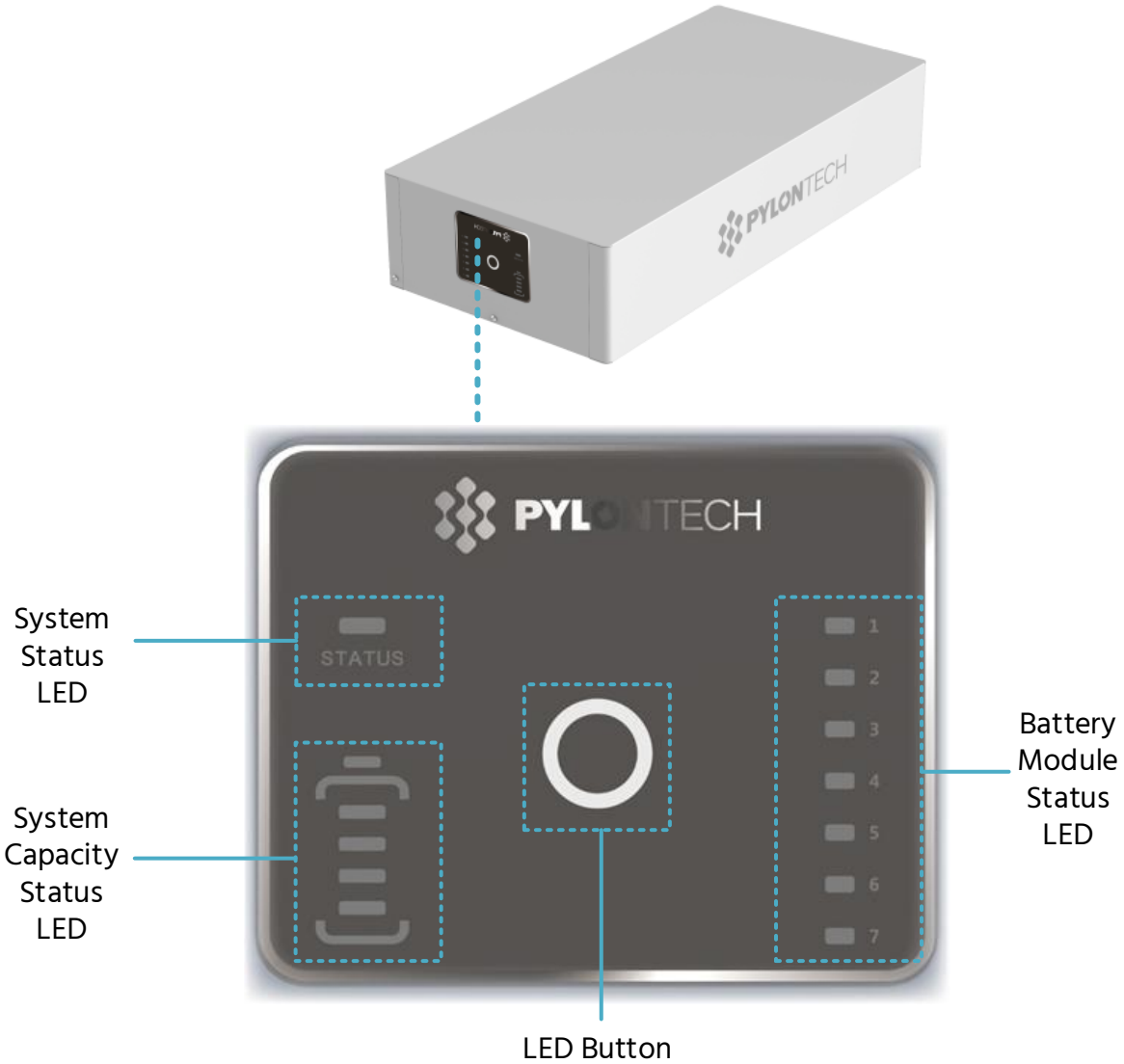

LED Button

Button	Action	Instructions
	Short Press	Display the LED panel for 20 seconds.
	Long Press 1 (about 5~10 seconds)	(1) When System Status LED fast flashes blue, release the button, then it is 115200 baud rate of RS485. (2) When System Status LED fast flashes orange, release the button, then it is 9600 baud rate of RS485. (3) If a special protocol (except Pylontech Protocol) is selected, follow 'Long Press 2', then the baud rate changing described here is ineffective.
	Long Press 2 (>10 seconds)	Communication Protocol Selection, for details please check with Pylontech service team. Communication Protocol Selection

		Guidance.

System Status LED

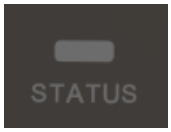	 	Refer to Instructions of the ***LED Indicators Instructions*** below.

Battery Module Status LED

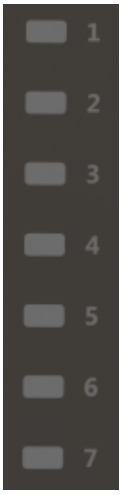		Blue light	Normal
		Orange light	Individual module alarm or protection occurs. See troubleshooting procedures in *Section 6.3 Troubleshooting.*

Instructions:

(1) Each Status LED (1~7) represents one individual battery module from number 1 (the one right beneath the control module) to number 7 (the one next to the base), as shown in the above illustration.

(2) If your system has less than 7 battery modules, the Status LED without corresponding battery will be always OFF.

(3) If your system has more than 7 battery modules, the Status LEDs will operate in a cyclic display mode: all 7 LEDs illuminate for 3 seconds, followed by a 3-second display showing the remaining quantity.

Examples:

8 modules → Display: 7 + 1; 9 modules → Display: 7 + 2; 10 modules → Display: 7 + 3

System Capacity Status LED

	Indicates the system SOC. Each LED indicates 25%SOC

LED Indicators Instructions

Status	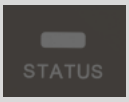		Remark
Self-checking	Blue, Flashing*	All flashing*	
Self-checking failure	Orange, Slow flashing**	Off	Battery module status off. See troubleshooting procedures in *Section 6.3 Troubleshooting.*
Black start success	Blue, fast flashing⁂	Off	
Black start failure	Orange, fast flashing⁂	Off	See troubleshooting procedures in *Section 6.3 Troubleshooting.*
Communication Lost or BMS error	Orange, solid	Indicating SOC, Blue, solid	See troubleshooting procedures in *Section 6.3 Troubleshooting.*
Idle	Blue, slow flashing**	Indicating SOC, Blue, solid	

Charge	Blue, solid	Indicating SOC, blue, solid	
Floating charge	Blue, solid	All flashing, horse race lamp	
Discharge	Blue, flashing*	Indicating SOC, blue, solid	
System sleep	Blue, flashing*	Off	Battery module status off.

*Flashing: 0.5s ON/0.5s OFF.

**Slow flashing: 2.0s ON/1.0s OFF.

***Fast flashing: 0.1s ON/0.1s OFF.

2.3.3 Control Module Interface Panel

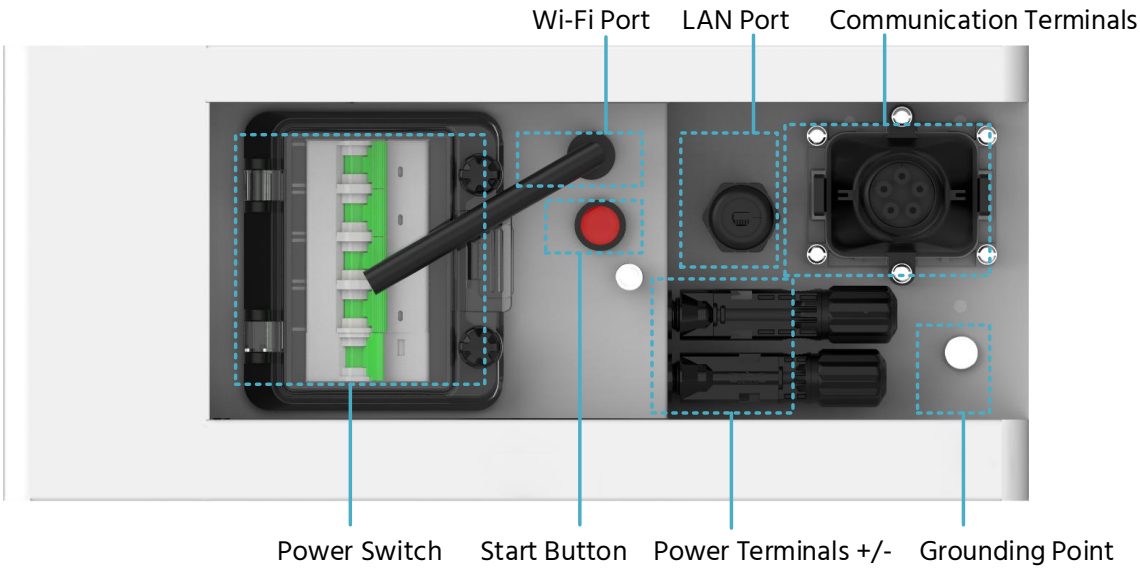

Power Switch (under the protection cover)

ON: Power Switch ON, able to turn on battery system by Start Button.

OFF: Power Switch OFF, able to turn off system completely, no power output.

Start Button

⚠ CAUTION

Caution: Press the Start button and hold more than 5 seconds until the buzzer rings to turn on the controller.

Multi-string starting sequence: please start up the last string (from communication structure, the last slave string, see the table below) of battery system first, one by one to the first string which shall be started up lastly. Details as below table.

Communication Structure	Startup Sequence
Master string*	Last Start up
Slave string 1	5th Start up
Slave string 2	4th Start up (if has)
Slave string 3	3rd Start up (if has)
Slave string 4	2nd Start up (if has)
Slave string 5	1st Start up (if has)

* BMS of the rack with Link Port 0 EMPTY is defined as the Master string, which communicates with the inverter or upper controller. In one system, there's ONLY ONE Master string, the rest are defined as

the slave strings.

Black start function: When the system is turned on, and relay is OPEN, press the Start Button more than 10 seconds. Then relay will be CLOSE for about 10 minutes without communication (depending on conditions).

Multi-string Black Start: Black start operation is ONLY needed to be performed on Master string. And it will close circuit for one of the strings within the system for 10 minutes. The slave string black start function is ONLY controlled by master string.

Plugs

There are three plugs on the panel. Make sure to take out the plugs before connecting the power cables or communication cables. REMEMBER to install the plugs back to the EMPTY holes to guarantee sealing performance of the panel.

NOTE: To ensure the sealing performance of the panel, the cable sleeves with proper sizes should be selected to match the diameters of the holes.

Grounding

Grounding point for connecting grounding cable.

Wi-Fi

Manufacturer: Pylon Technologies Co., Ltd.

Address: Plant 8, No.505 Kunkai Road, JinXi Town, 215324 Kunshan City, Jiangsu Province, PEOPLE'S REPUBLIC OF CHINA

Importer: XXXX (Located in installed country）

Address: XXXX (Located in installed country）

Basic Information of Wi-Fi	
Wireless maximum Output Power	<20 dBm
Operating frequency	2412-2472 MHz
Gain of antenna	2.5 dBi
Modulation system	DBPSK/DQPSK/CCK(DSSS) BPSK/QPSK/16QAM/64QAM(OFDM)
Modulating Repetition	1 Mbps/2 Mbps/5.5 Mbps/11 Mbps (DSSS) 6 Mbps/9 Mbps/12 Mbps/18 Mbps/24 Mbps/36 Mbps/48 Mbps/ 54 Mbps (OFDM) MCS0~MCS7 (802.1 1n 20MHz)

Channel spacing	5 MHZ
Type of antenna	2.4G IPEX-SMA Antenna
WIFI maximum transmission power	18.63dBm
Bluetooth frequency range	2402~2480MHz
Bluetooth maximum transmission power	6.94dBm

Power Terminals (+/-)

Connect power cables of battery system with inverter.

During multi-strings operation, you can select P-Combiner-HV-3 (up to 3 strings, maximum 50 Amps) or P-Combiner-HV-6 (up to 6 strings, maximum 100 Amps) for connection. For more details of P-Combiner, please check with your distributor or Pylontech service team.

Communication Terminals (RS485/CAN/Link0/Link1)

NOTE: Before connecting the communication terminals, loosen the two screws on the cover as follows, then you will see the communication terminal as follows.

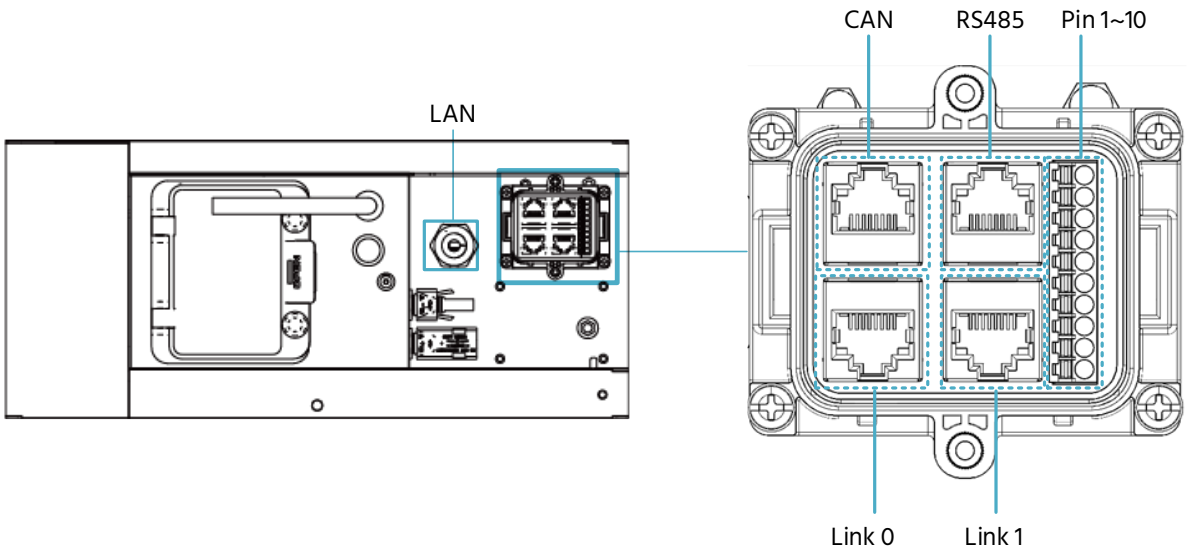

Following instructions are for your reference:

LAN: Used for where the Wi-Fi signal is not good or there is no Wi-Fi. To connect to the online portal directly through a network cable (another side to the internet router).

Link0/Link1 Communication Terminal: (RJ45 port) designed only for multi-strings operation, connecting from the first BMS Link 1 to the second BMS Link 0, then from the second BMS Link 1 to

the third BMS link 0 (if has), all the way to the last BMS Link 0. The BMS with Link Port 0 EMPTY is defined as the Master string, which communicates with the inverter or upper controller.

***NOTE*:** For multi-strings operation, please firstly make sure the communication cables between multiple BMSs are properly connected between Link 1 and Link 0, prior to the startup process.

CAN Communication Terminal: (RJ45 port) follows CAN protocol, for communication between battery system and inverter.

RS485 Communication Terminal: (RJ45 port) follows MODBUS 485 protocol, for communication between battery system and inverter.

Definitions of RJ45 Port PIN

No.	CAN	RS485
1	---	---
2	GND	---
3	---	---
4	CANH	---
5	CANL	---
6	---	---
7	---	RS485A
8	---	RS485B

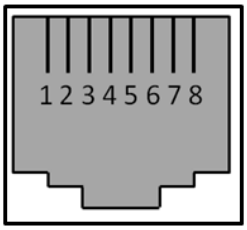

RJ45 Port

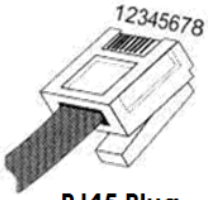

RJ45 Plug

Pin 1~10 Assignment Table:

1	2	3	4	5	6	7
-	+	GND	H	L	IN+	IN-
E-Stop		CAN			For SMA	

E-STOP: Emergency stop feature is default inactivated. If you need to use such function, please contact Pylontech service team.

IN+/IN-: PIN6/PIN7 terminals are used for SMA inverter Enable Line feature, for more details please check with Pylontech service team.

For communication cables connection of PIN1 - 10 terminal station, please follow the steps below:

1. Loosen the two screws to remove the communication protection cover from the base as shown.

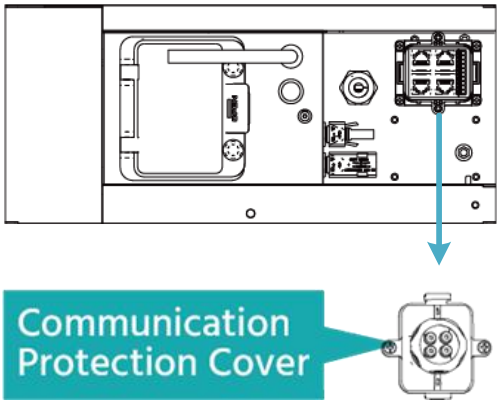

2.

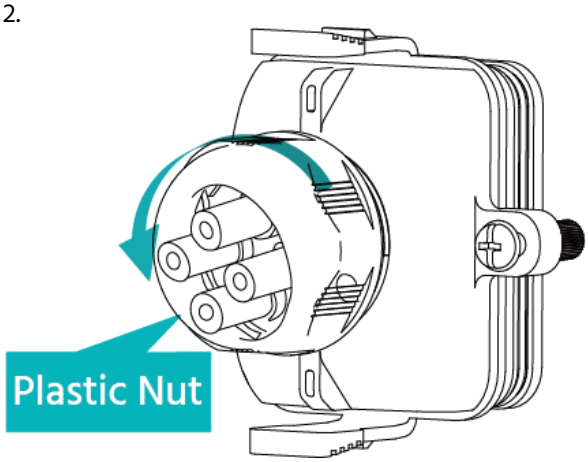

3. Take out the rubber plugs from the sealing rubber gasket.

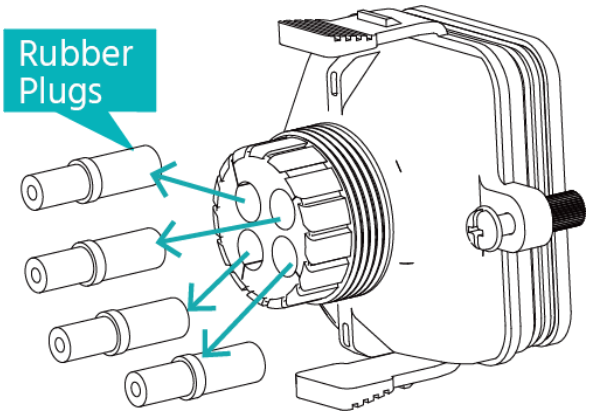

4. Remove the sealing rubber gasket from the cover.

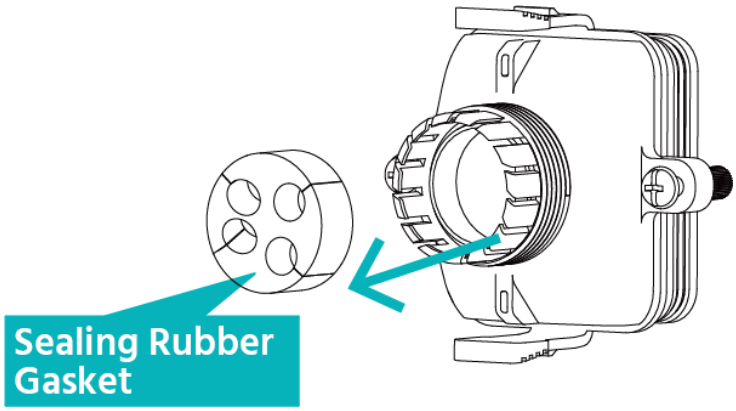

5. Insert the cable into the hole and get it stuck in the sealing rubber gasket.

⚠ CAUTION

Caution: Be sure to put the rubber gasket in the correct direction as shown.

DO NOT put the rubber gasket in a reverse direction which will decrease the water resistance of the cover and cause damage to the product.

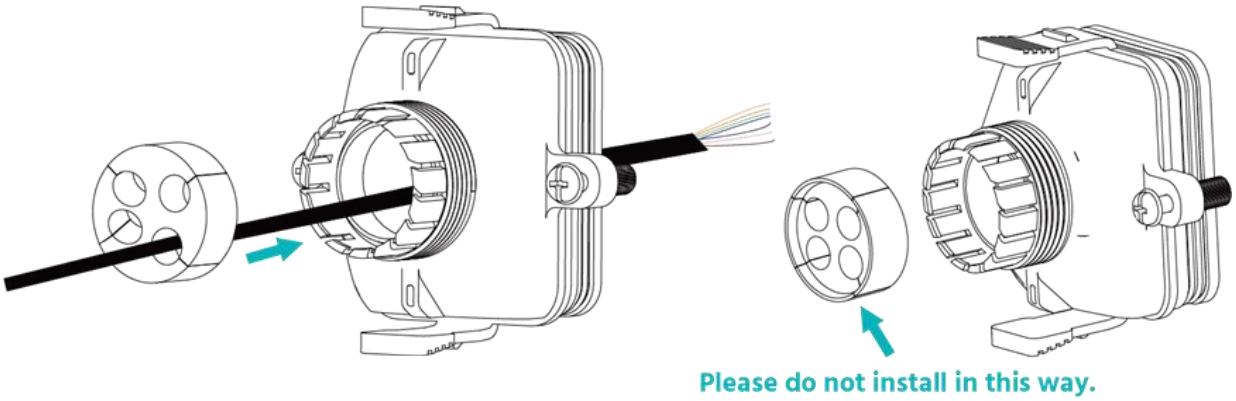

6. Follow the instructions of Pin 1~10 Assignment Table, and insert the cable terminal into the corresponding pin of the terminal plug. *

* You can use a screwdriver as shown or your finger to press the button.

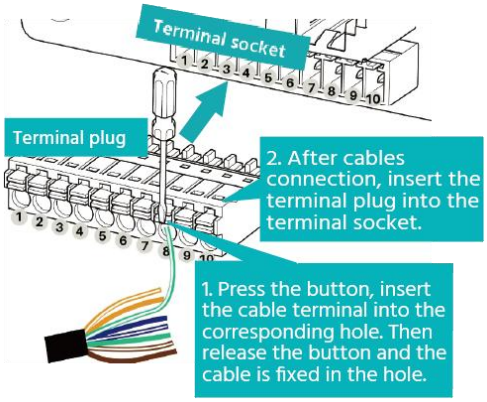

7. After communication cable connection, be sure to install back the rubber gasket into the protection cover. And Insert the rubber plugs in the EMPTY holes of the rubber gasket to guarantee water resistance of the cover.

⚠ CAUTION

Caution: REMEMBER to screw the plastic nut back to the cover. And fasten the two screws of the protection cover to fix it on the base .

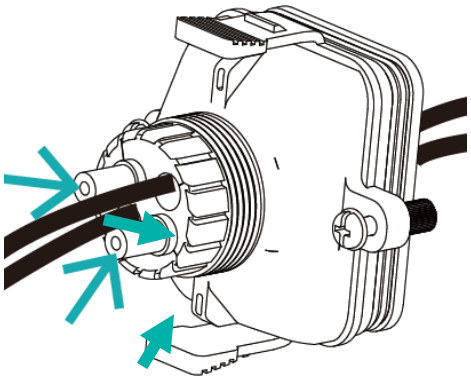

2.4 System Diagram

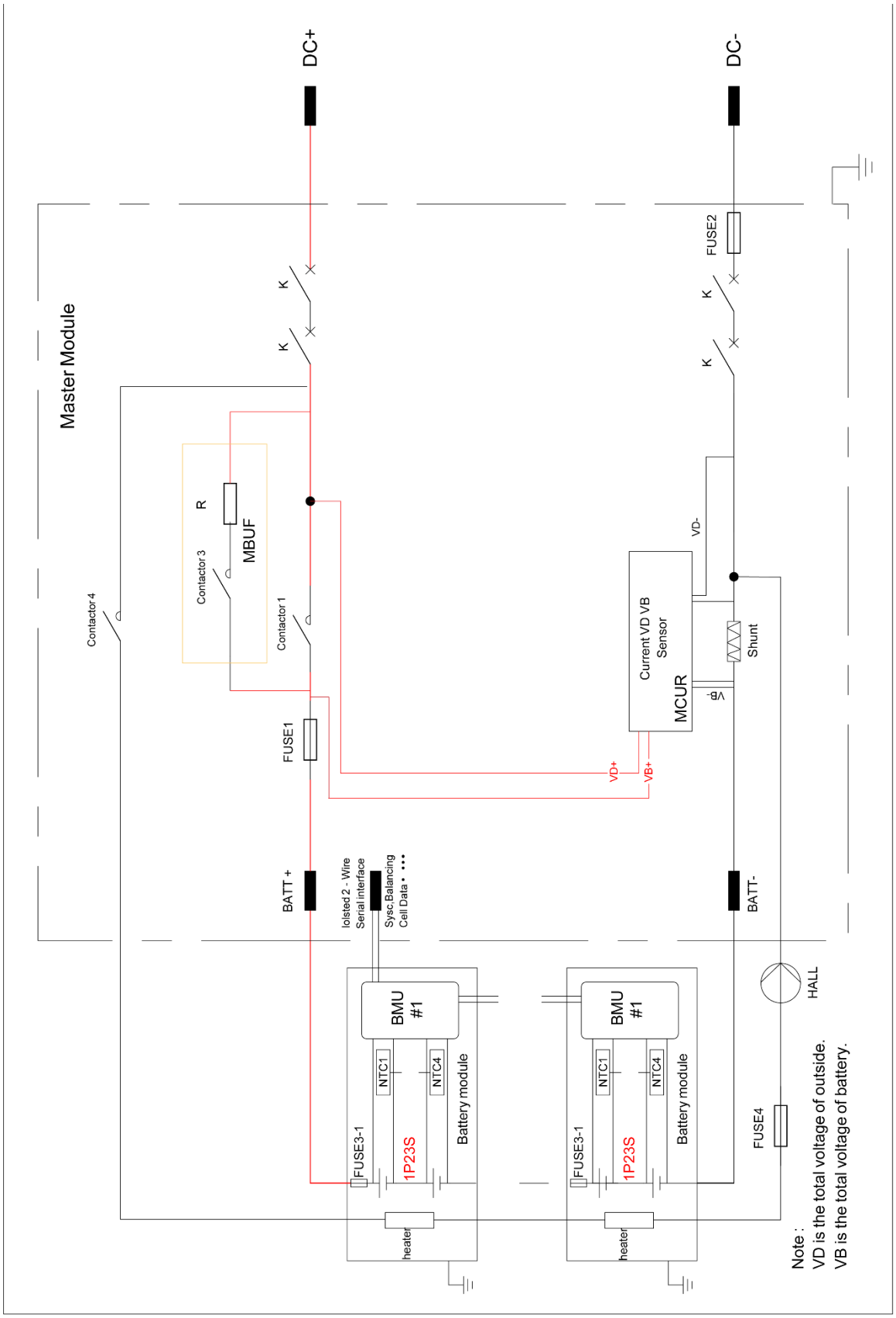

3 Installation

Please check every installation step in detail at <Annex 1: Installation and System Turn-on Process List> during the installation.

3.1 Checking Before the Installation

Checking the Outer Packing and Deliverables

- After receiving the product, check the outer packing for damage, such as holes, cracks, deformation and so on. If any damage is found, contact the local retailer as soon as possible.
- After unpacking the product, check that the deliverables are complete. If any item is missing or damaged, contact the local retailer as soon as possible.

⚠ CAUTION

Caution: Moving heavy objects. Be careful to prevent injury when moving heavy objects. Select an suitable way to moving heavy objects according to product weight.

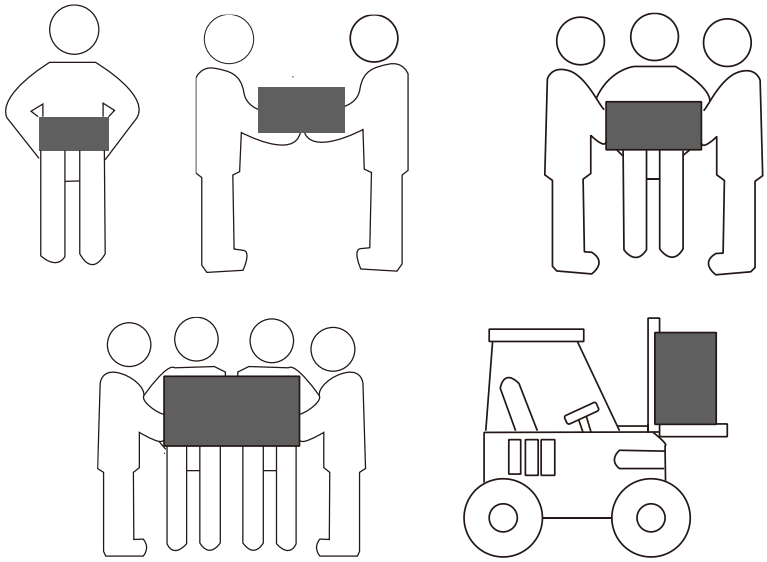

Weight	Method	Recommendation
< 18 kg	Manual handling	1 person
18 ~ 32 kg	Manual handling	2 persons
32 ~ 55 kg	Manual handling	3 persons
55 ~ 68 kg	Manual handling	4 persons
> 68 kg	Moving device	Forklift

Packing List

RMC1000(-Pro) Battery Controller		
1	RMC1000(-Pro) battery controller	1
2	Reefmagic(-Pro) base (770 × 380 × 40, mm)	1
3	3m black internal communication cable (RJ45)	1
4	3m DC+ red external power cable (8AWG)	1
5	3m DC- black external power cable (8AWG)	1
6	1m yellow-green grounding cable (10AWG)	1
7	M8 bolts for fixing base	6
8	M6 screws for fixing ground cable	1
9	M4 screws for fixing the control module	2
10	M4 screws for fixing anti-Toppling Bracket	2
11	Anti-Toppling bracket	2
12	DC connector negative	1
13	DC connector positive	1
14	Pin connector	1
15	Footrest	4
16	Dismantle tool	1
17	Warranty card	1
18	Product manual	2
19	Moisture-proof desiccant	1
RMB70100(-Pro) Battery Module		
1	RMB70100(-Pro) battery module	1
2	Qualified Certificate Card	1
3	Moisture-proof desiccant	1

NOTE:

- For details about actual deliverables, see the Packing List in the packing case.
- No additional kits are needed for Reefmagic(-Pro) installation.

3.2 Preparing Tools and Instruments

Tools and Instruments

Type	Tools and Instruments		
Installation	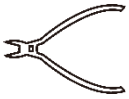	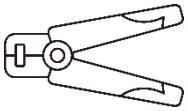	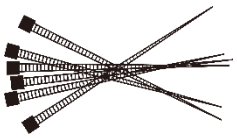
	Wire Cutter	Crimping Plier	Cable Ties
	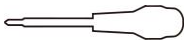	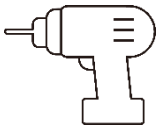	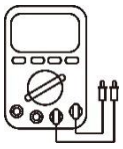
	Screwdriver	Electric Screwdriver	1000VDC Multimeter
	Adjustable Wrench	Socket Wrench Set	
Personal protective equipment (PPE)			
	Insulated Gloves	Safety Goggles	Safety Shoes

NOTE: Use properly insulated tools to prevent accidental electric shock or short circuits. If insulated tools are not available, cover the entire exposed metal surfaces with available insulated alternatives, except their tips, with electrical tape.

3.3 Selecting the Installation Sites

3.3.1 Working Environment Requirements

Cleaning

⚠ DANGER

Danger: Before installation and system power on, the dust and iron scurf must be removed to keep a clean environment.
The system cannot be installed in desert area without an enclosure to prevent from sand.

⚠ DANGER

Danger: Battery module has active DC power at terminals all the time. Be careful to handle the modules.

Temperature

- Reefmagic: The system working temperature range: -10°C~55°C; Optimum temperature: 18°C~28°C.
- Reefmagic-Pro: The system working temperature range: -20°C~55°C; Optimum temperature: 18°C~28°C.

There are no mandatory ventilation requirements for battery module, but please avoid of installation in confined area. The area shall avoid high salinity, humidity or temperature.

⚠ CAUTION

Caution: The IP rating of Reefmagic(-Pro) system is IP65. But please avoid frost or direct sunlight. Out of the working temperature range will cause the battery system high / low temperature alarm or protection which will further lead to the cycle life reduction. According to the environment requirements, a cooling system or heating system should be installed when necessary.

Fire-extinguisher System

⚠ DANGER

Danger: The fire-extinguisher system must be equipped for safety purpose. The fire system needs to be checked regularly to ensure a normal working status. Regarding to the using and maintenance requirements, please follow local fire equipment guidance.

Grounding System

⚠ DANGER

Danger: Before the battery installation, ensure that the grounding point of the base is stable

and reliable. If the battery system is installed in an independent equipment cabin (e.g. container), the grounding of the cabin must be stable and reliable.
The resistance of the grounding system must be ≤100 mΩ.

Clearance

Minimum clearance to heat source shall be more than 2 meters.

Minimum clearance between battery strings shall be more than 0.3 meters.

3.3.2 Installation Space Requirements

⚠ WARNING

Warning: The power terminals of this system have high DC voltage. It must be installed in a restricted access area.

Reefmagic(-Pro) system must not be immersed in water. It is recommended that the battery should be installed with a minimum clearance of 300 mm above the ground if there is risk for waterlogging or flooding.

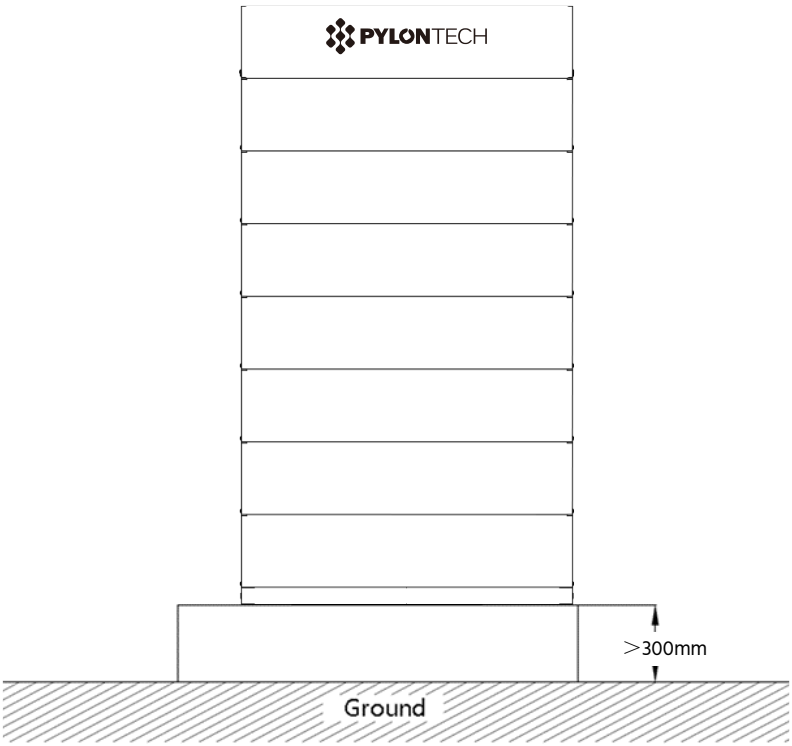

3.3.3 Installation Foundation Requirements

The support surface should have sufficient load capacity to support the weight of whole battery system (150~700 kg).

The system must be installed on a fixed and flat support surface.

3.4 System Installation

DANGER

Danger: The system is a high voltage DC system, operated by qualified and authorized person only.

3.4.1 Mounting the Battery Rack Base

Two approaches available for this installation. Please put the base along the wall and reserve 42-62 mm distance between back of the base and the wall.

Approach 1:

The base can be fixed securely on the support surface with 4 pcs M8×60 expansion bolts.

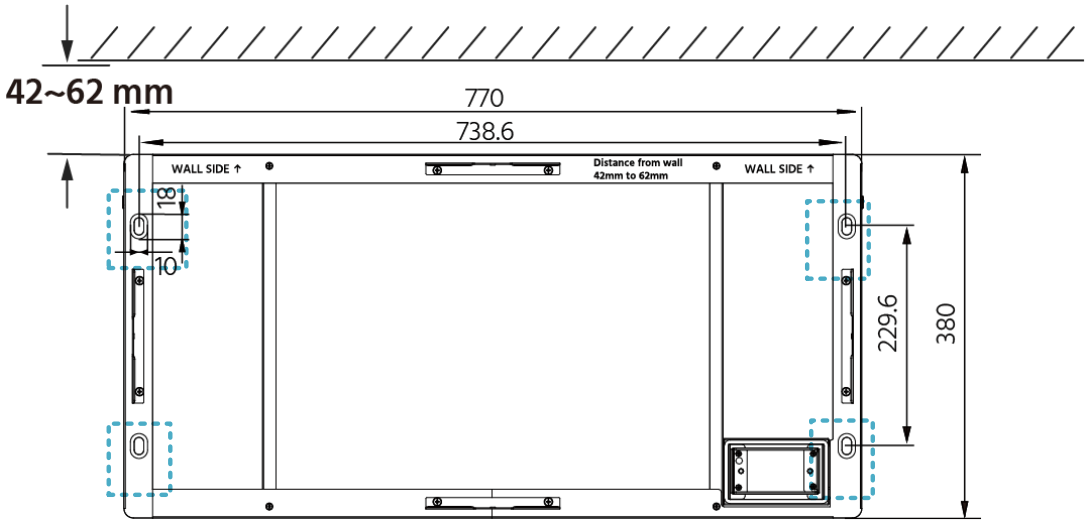

Battery rack base holes' (circled in red) bitmap (unit: mm)

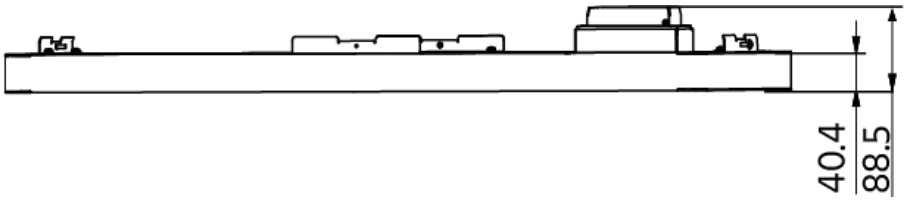

Battery rack base bitmap (unit: mm)

Approach 2:

For the uneven ground, install the base feet and adjust the feet to ensure that the battery remains horizontal by an additional leveling instrument.

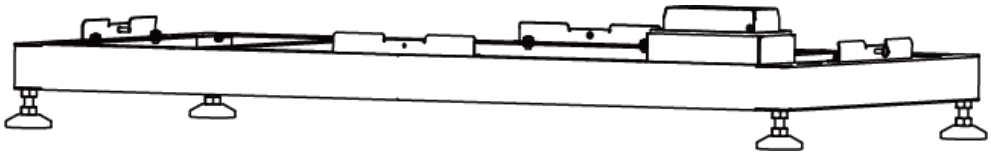

3.4.2 Installing the Battery Module onto the Base

⚠ WARNING

Warning: Single battery module is 60 kg. The battery module must be handled by more than 4 people if there're no handling tools.

1. Lift the two handles on the battery module as below, making sure the battery not tilting to one side.

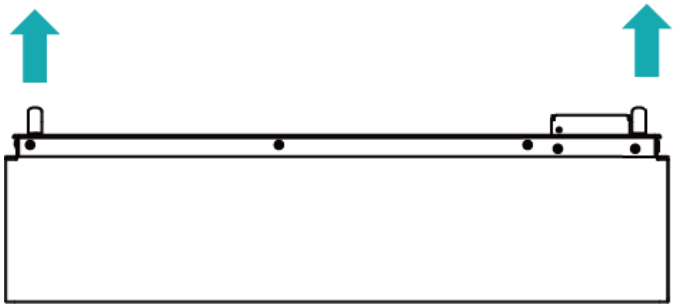

2. Adjust to keep the connector of the battery (circled in red) align with the connector of the base (circled in red). Slowly put down the battery, fitting it properly onto the base.

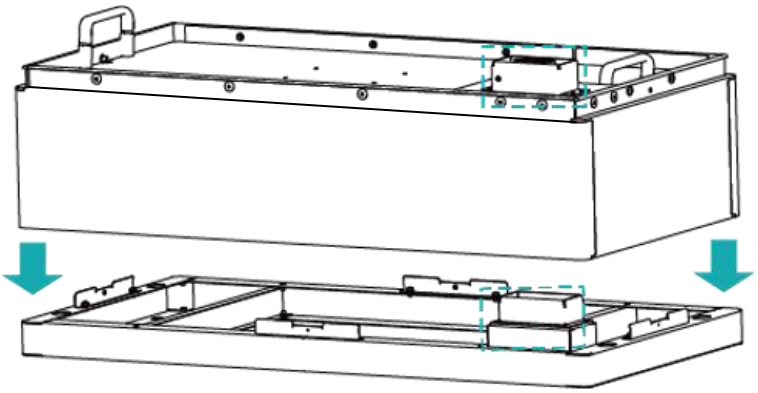

3. Continue to install the left battery modules one by one onto the existing battery.

NOTE: Maximum 10 battery modules are allowed to be installed in one system.

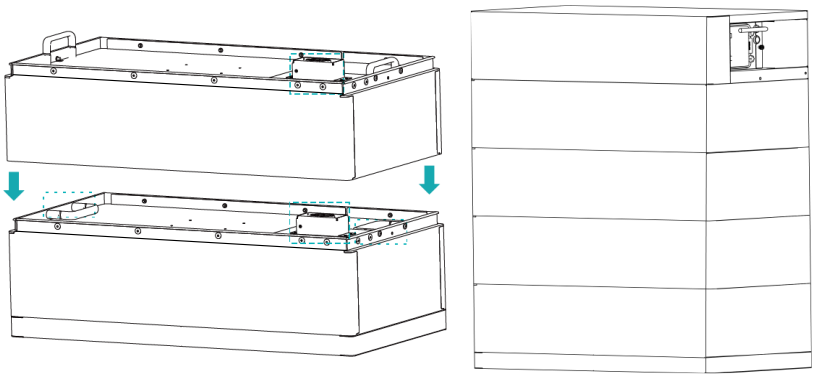

3.4.3 Battery Modules and Control Module (BMS) Pile up

DANGER

Danger: When battery is connected together with the base, the internal socket still has high voltage DC power from serial connected battery modules.

1. After installation of the battery module, lift up the control module (BMS), adjusting to make its connector align with the connector of the battery module.
2. Slowly place down the control module (BMS) on the installed battery module.

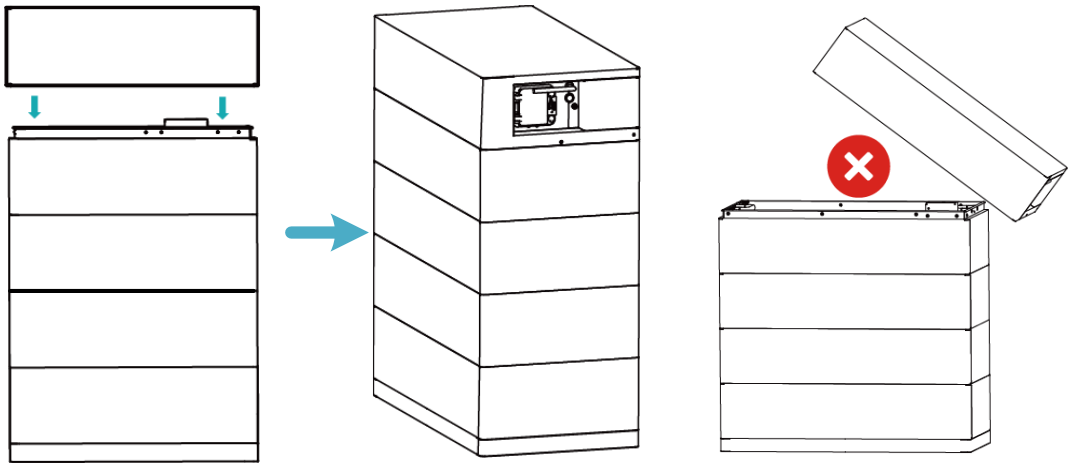

NOTE: The above figure is just for reference. The quantity of the battery modules is based on the practical system.

3. Fix the control module to the battery module 2 pcs M4 × 20 screws on both sides of the control module base.

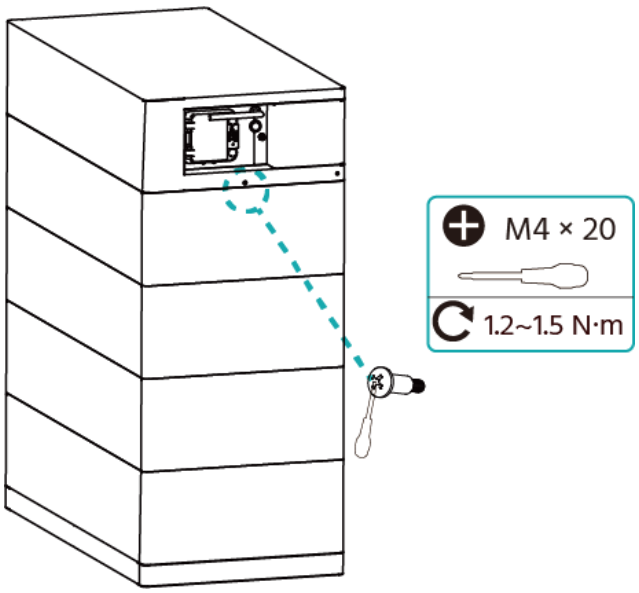

3.4.4 Installing the Anti-Toppling Brackets for the System

Reefmagic(-Pro) system is equipped with two anti-toppling brackets as follows.

Such brackets act as an alternative of ground mounting of the battery system. Customers can choose either of the following methods for the system installation:

- Ground mounting with 4 pcs M8 expansion bolts to the support surface (see *Section 3.4.1 Mounting the Battery Rack Base*).
- Bracket mounting with 2 pcs M8 expansion bolts to the wall (Battery system still needs to be placed on the support surface for supporting the overall weight.)

As long as the installation area meets the requirement of the installation site (see *Section 3.3 Selecting the Installation Sites*), in either case the installation stability is guaranteed.

The detailed installation process with such brackets is as follows:

1. Follow the illustrations below, firstly fit the anti-toppling brackets on back sides of the BMS, then use M4 × 8 screws to fix.

   REMEMBER to fit the brackets on both sides of BMS, same with following steps：

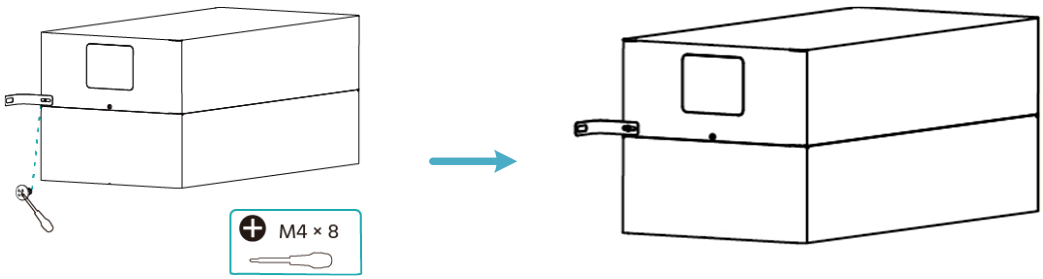

2. Mark the central points of the slotted holes at both sides on the wall.

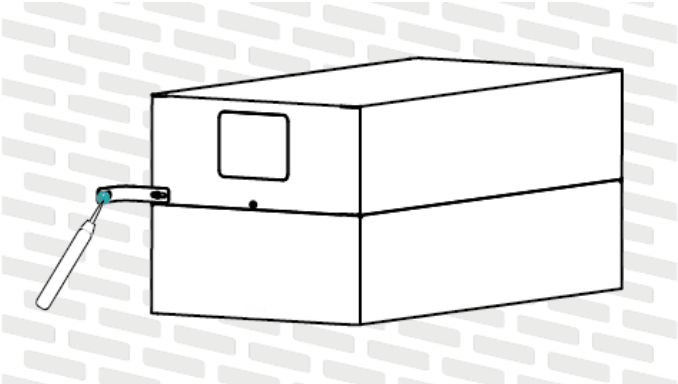

3. Dismantle the brackets on both sides. Aligning the central points, drill two holes (≥60 mm depth) in the wall with a drilling tool, and clean the holes.

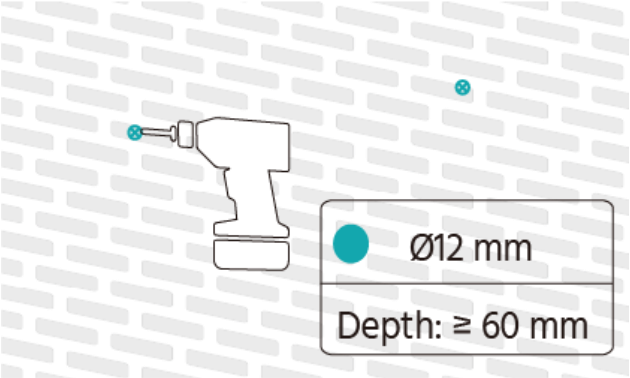

4. Embed the 2 pcs M8 expansion bolts into the holes respectively.

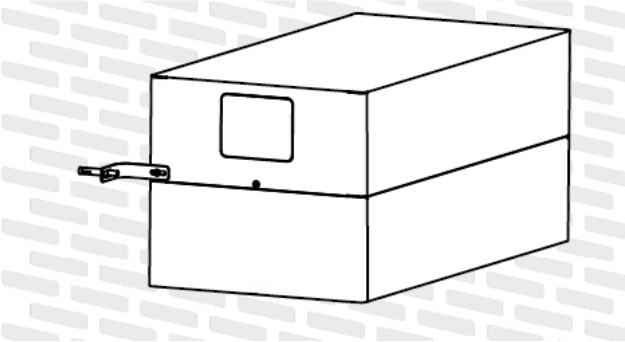

5. Fix the M8 nut across the 8 mm flat gasket and spring washer, with 12~13 N·m torque. Repeat this step for the other bracket.

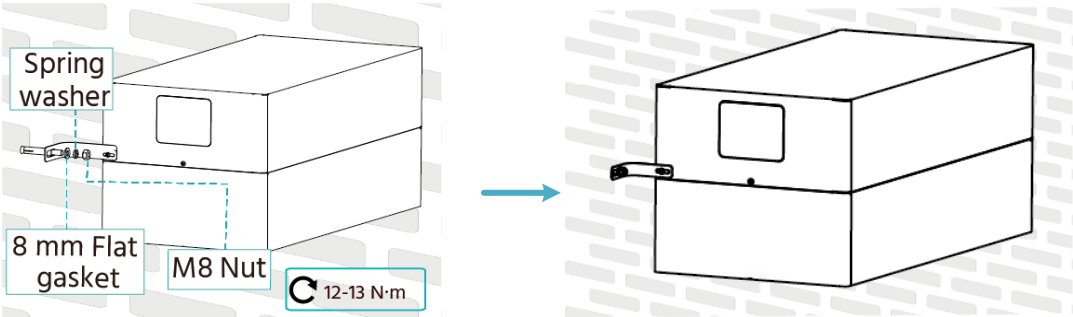

4 Cable Connection

⚠ DANGER

Danger: The battery system is high voltage DC system. Ensure that the grounding of the rack is stable and reliable.

⚠ DANGER

Danger: The positive and negative connections of the battery system must not be short-circuited or reversed.

⚠ CAUTION

Caution: Wrong communication cables connection will cause the battery system failure.

4.1 Checking Cables

⚠ CAUTION

Caution: Power cables use water-proofed connectors. To disconnect, it is required to use a special tool (in the accessory bag), shown as the picture. Do not pull out the cables directly.

NOTE: Communication cable uses RJ45 connector and water-proof cover (M19-RJ45) which match with the communication port on the control module.

Cables:

- 3m DC+ red external power cable (8AWG)
- 3m DC- black external power cable (8AWG)

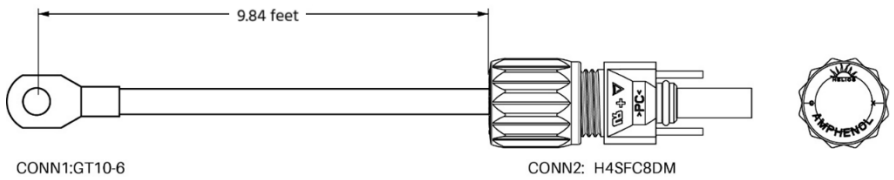

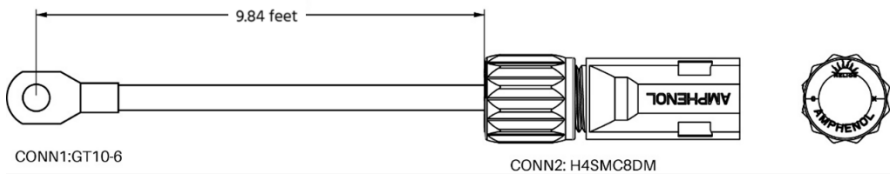

- 3m black internal communication cable (RJ45)

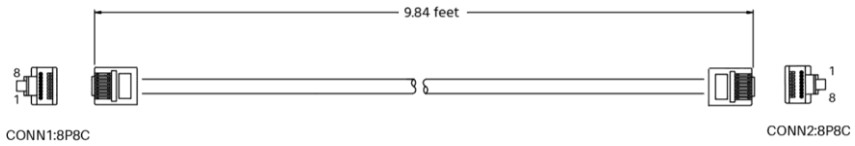

- 1m yellow-green grounding cable (10AWG)

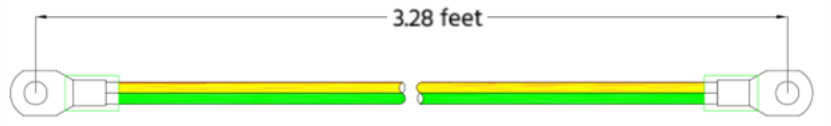

4.2 Grounding Cables

WARNING

Warning: The system modules have 3 grounding points as follows. Grounding cable must be ⩾10 AWG. The cable shall be copper with yellow-green color.

1. Use a screwdriver to loosen the M3 screw and then take off the cover.

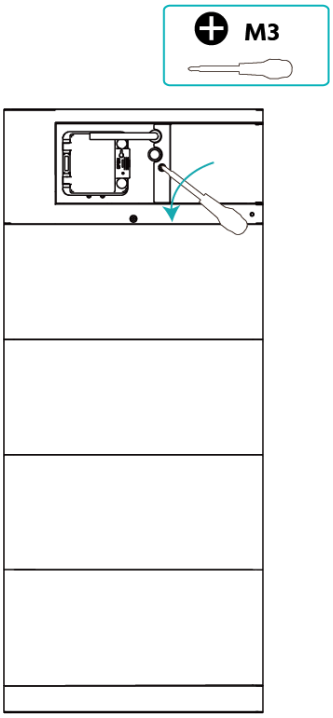

2. Connect the grounding cables.

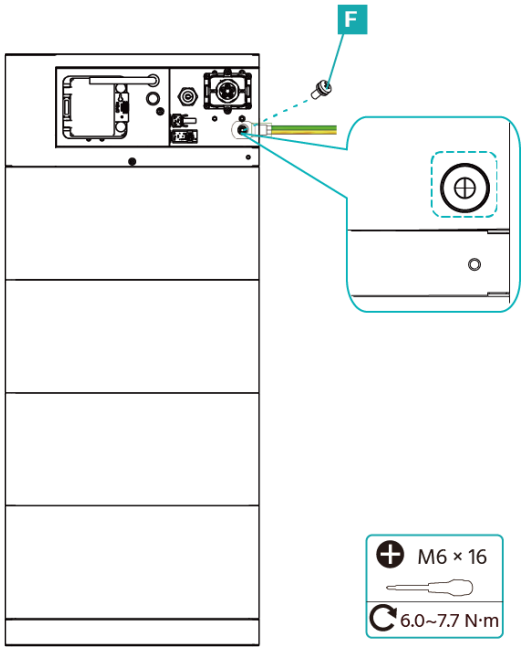

4.3 Multi-string Cable Connections

4.3.1 Electrical Wiring

A. Wiring diagram of 3 strings` system (String quantity ≤ 3)

It is suggested to use P-Combiner-HV-3 for up to 3 strings, maximum 50 Amps continuous operation.

IMPORTANT: DO NOT use P-Combiner-HV-3 or similar concept of multi-strings connection method in case the multiple battery strings need to be operated independently.

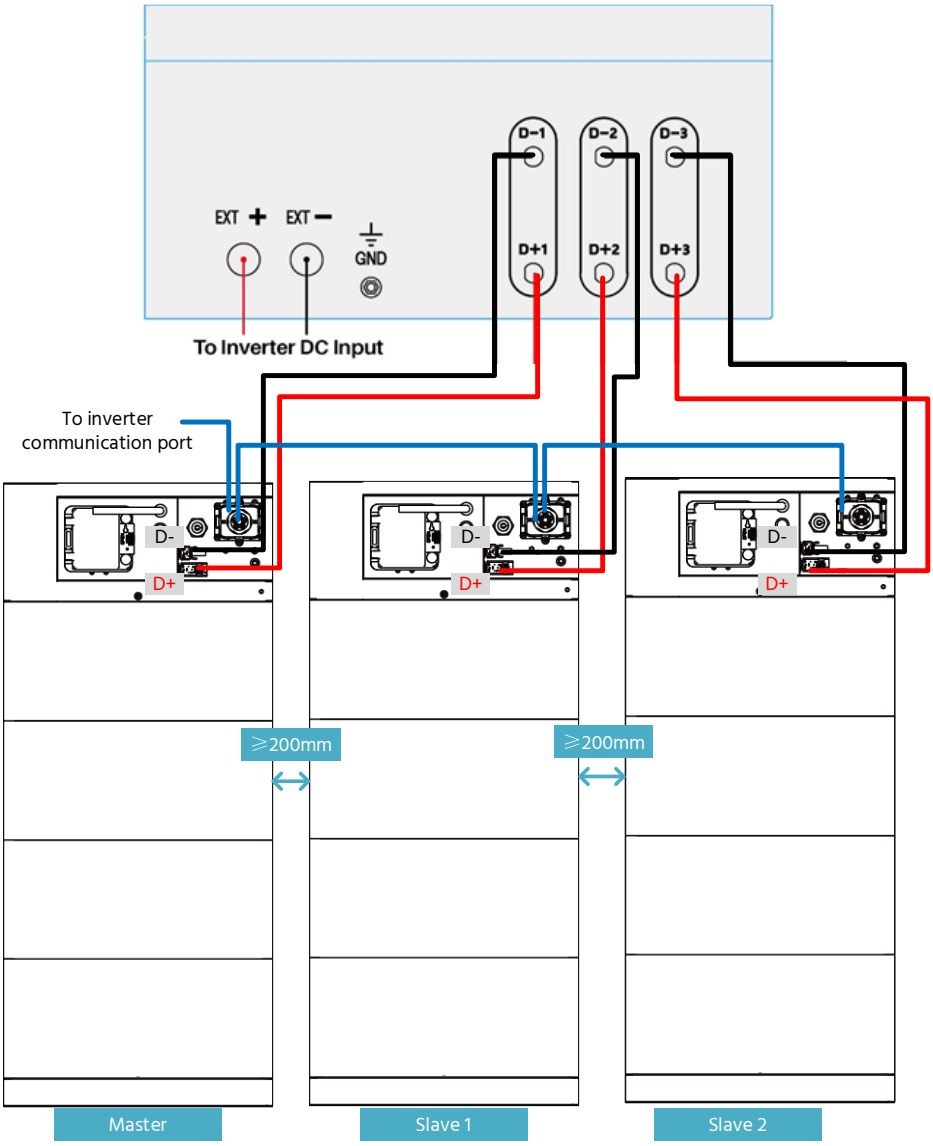

NOTE 1: Make sure to have the D+ & D- plugs into the combiner box properly.

NOTE 2: The distance between each battery strings shall be greater than or equal to 200mm.

NOTE 3: During operation, a distance of 40mm shall be maintained between the human body and The battery system.

B. Wiring diagram of multi strings' system (3<String quantity ≤ 10)

It is suggested to use P-Combiner-HV-6 for up to 10 strings, maximum 100 Amps continuous operation.

IMPORTANT: DO NOT use P-Combiner-HV-6 or similar concept of multi-strings connection method in case the multiple battery strings need to be operated independently.

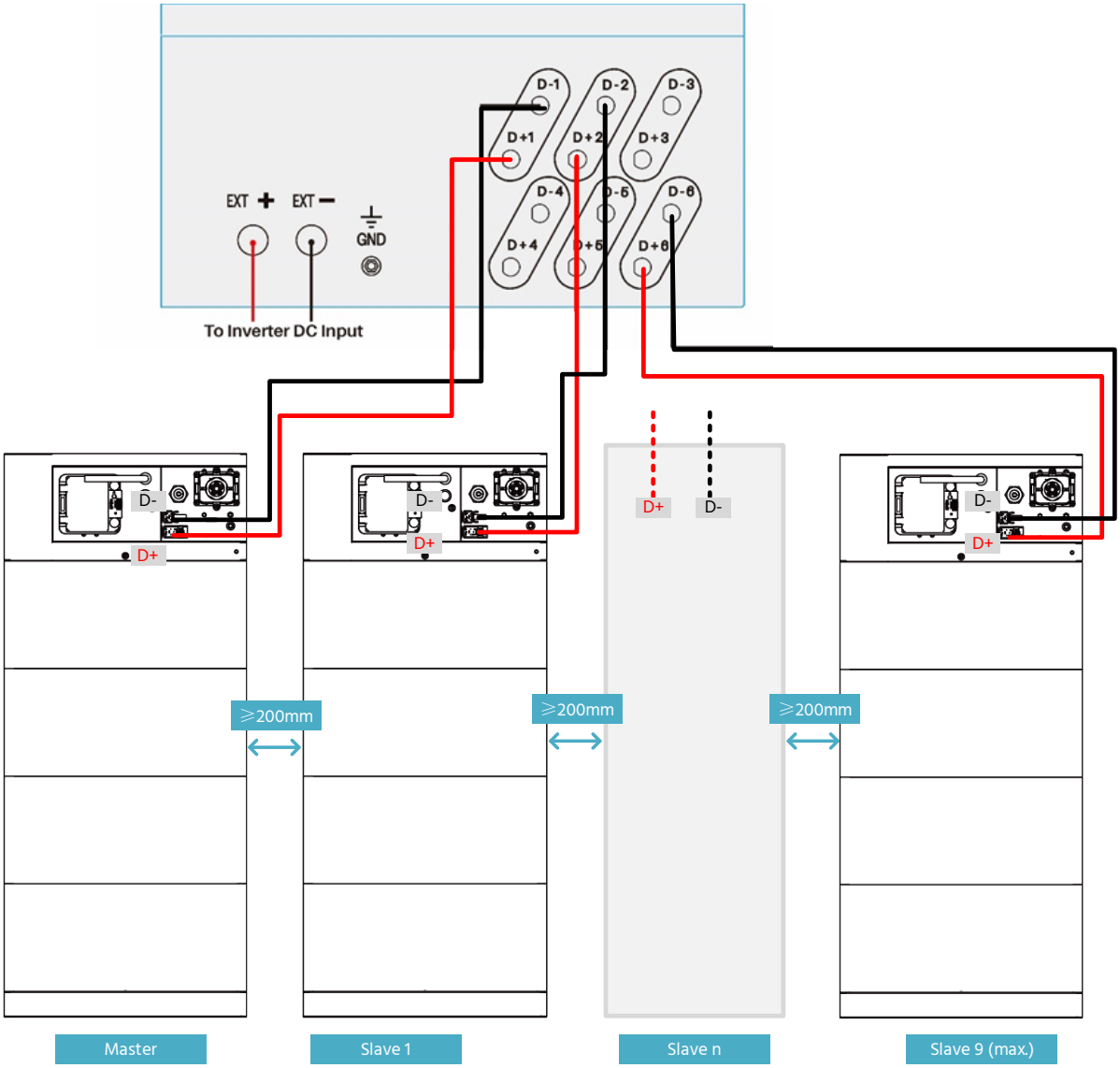

NOTE: Make sure to have the D+ & D- plugs into the combiner box properly.

NOTE 2: The distance between each battery strings shall be greater than or equal to 200mm.

NOTE 3: During operation, a distance of 40mm shall be maintained between the human body and The battery system.

4.3.2 Communication Cable Connections of Master and Slave Battery Strings

The communication for master/slave string connection shall use an 8 pins pin-pin RJ45 cable, connecting from the first BMS Link 1 to the second BMS Link 0, then from the second BMS Link 1 to third BMS link 0(if has), all the way to the last BMS Link 0.

The BMS with Link Port 0 EMPTY is defined as the Master string. Select either CAN or RS485 on the master string for further connection with the inverter or upper controller.

The CAN/RS485 Port of the slave string is ineffective in this case.

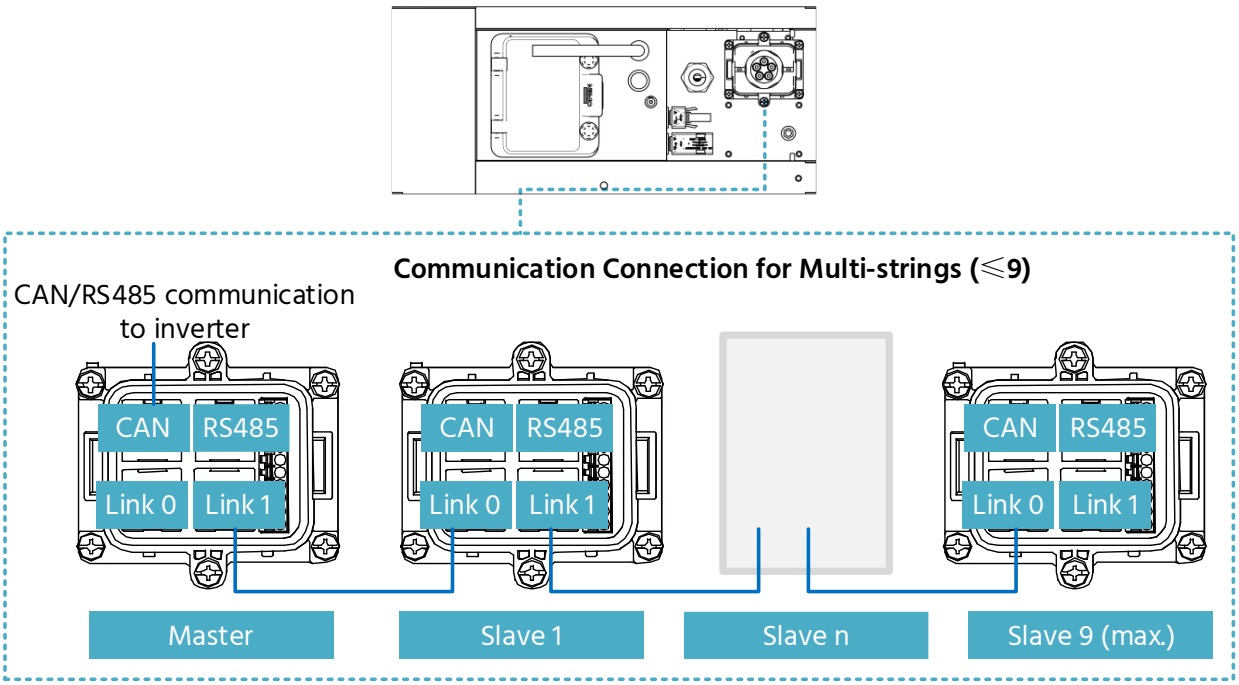

5 Commissioning

5.1 System Turning On

5.1.1 Single String System Turning On

⚠ WARNING

Warning: Double check all the power cables and communication cables. Ensure that the voltage of the inverter/PCS matches the voltage of the battery system. Check that all the power switches are OFF.

Procedure:

1. Check the grounding is connected.
2. Check all the cables are connected correctly.
3. If necessary, turn on the switch for battery on the inverter or the switch between inverter and battery system. If possible, turn on AC or PV power source to wake up the inverter.
4. Open the protection cover of Power Switch on the control module (BMS). And turn on Power Switch.
5. Press Start Button for at least 5 seconds or until buzzer rings. Battery takes 10-30 seconds for self-checking.

If the inverter is powered by AC or PV source, most types of inverters can set up communication with BMS automatically, in this case, the BMS will close relay and system is ready for work.

If after 30 seconds' self-checking, the LED becomes as follows, this means the inverter needs to be powered on by the battery energy:

Status: Orange, solid	SOC: Blue, Solid

In this case, press the Start Button for at least 10 seconds, till the Status LED lighting Blue and fast flashing. Then the battery will perform black start to support the inverter. After the inverter is started and communication is set, the BMS is ready for work.

If the battery has been configured to a different communication protocol, please follow LED Long Press 2 guidance in *Section 2.3.2 Control Module Display Panel*. Make sure to select the correct protocol and restart BMS to enable the communication with inverter.

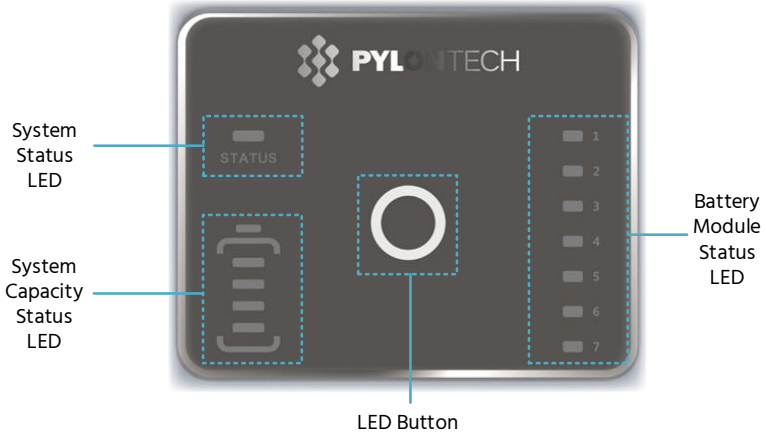

⚠ CAUTION

Caution: If the power switch is tripped off due to over current or short circuit, be sure to wait more than 30 minutes, then it can be turned on again; otherwise it may cause damage to the switch.

⚠ WARNING

Warning: If there is any failure during the self-check process, be sure to debug the failure prior to next step. If the "STATUS" LED shows orange from the beginning, it means there is failure in the battery string. In this case, the Power Relays in BMS will open, and debugging must be done first.

NOTE: The LED lamp will be off in 20 seconds without any operation.

⚠ CAUTION

Caution: During the first time starting, the system requires full charge process for SOC calibration purpose.

⚠ CAUTION

Caution: After long time storage without charging, it is suggested to fully charge the whole Battery Energy Storage System (BESS) prior to installation. Depending on the SOC level, regularly every 6 months' full charge is requested during continuous operation as well. it will be handled automatically by the communication between BESS and external device.

5.1.2 Multi-strings System Turning On

⚠ WARNING

Warning: Double check all the power cables and communication cables. Make sure the voltage of the inverter/PCS matches the voltage of the battery system. Check to make sure all the power switches are OFF.

Procedure:

1. Check grounding is connected.
2. Check all cables are connected correctly, especially the Link 1 / Link 0 between master and slave strings.
3. If necessary, turn on the switch for battery on the inverter or the switch between inverter and battery system. If possible, turn on AC or PV power source to wake up the inverter.
4. Open protect cover of power switch. And turn on power switch on the control module (BMS)of all the strings.
5. From the last string, press the start button for at least 5 seconds or until buzzer rings for start-up. Then further turn on each string one by one following the table below, the start-up interval between each string shall be less than 30 seconds:

Communication Structure	Start-up Sequence
Master string	Last Start-up
Slave string 1	5th Start-up
Slave string 2	4th Start-up (if has)
Slave string 3	3rd Start-up (if has)
Slave string 4	2nd Start-up (if has)
Slave string 5	1st Start-up (if has)

6. After all strings start-up, the battery system takes 30 seconds for self-checking.

   If the inverter is powered by AC or PV source, most types of inverters can set up communication with BMS automatically. In this case, the BMS will close relay and system is ready for work.
   If after 30 seconds' self-checking the LED becomes as follows, this means the inverter needs to be powered on by the battery energy:

Status:	Orange, solid	SOC:	Blue, Solid

   In this case, press and hold the Start button for at least 10 seconds, till the Status LED lighting Blue and fast flashing. Then battery will perform black start to support inverter. After the inverter is started and communication is established, the BMS is ready for work.

5.2 System Debug

This system debug is for BESS system (Battery Energy Storage System). It must be operated with configured UPS, PCS and EMS system together, which means that the BESS debug cannot be performed alone.

Debug Procedure	Content
Preparations for debug	Turn on the BESS system, referring to *Section 5.1 System Turning On.* DO NOT turn on the load before turning on the whole BESS system. ***NOTE:*** If the equipment other than the BESS has the turning on procedure of its own system, ensure to follow its operation instructions.
Working together with inverter	(1) Check the communication cable connection and make sure the cable order on battery and inverter side are matched. All undefined pins are suggested to be empty. (2) Check the baud rate of inverter. The default value of battery CAN is 500 kbps, MODBUS 485 is 9600 bps. If necessary, change the baud rate of RS485. (3) Check that the terminal resistance CAN 120 Ω, RS485 120 Ω. (4) If necessary, check the setting on inverter or control box has right parameters and brand of battery. And check the information of BESS shown on inverter is correct.

6 Maintenance

6.1 System Turning Off

⚠ DANGER

Danger: When any failure occurs or there is a need for service, the battery storage system must be powered off at first.

Procedure

1. Turn off inverter or power supply on DC side.
2. Turn off the switch between PCS and battery system.
3. Turn off the power switch of all BMSs.

⚠ CAUTION

Caution: Before replacing the battery module for service, make sure to charge/discharge the existing battery module voltage similar to the replaced one. Otherwise the system needs long time to do balance for this replaced battery module.

⚠ CAUTION

Caution: When restart is required for any troubleshooting steps, make sure to restart the entire system (every BMS within the system). Please do not only restart partially of the BMS within the system, which will further lead to error.

6.2 Battery Maintenance

DANGER

Danger: The maintenance of battery must be done by qualified and authorized person only.

DANGER

Danger: The power must be turned off prior to any maintenance of the battery.

Voltage Inspection

Check the voltage of battery system through the monitor system. Check if the system is abnormal voltage. For example: Single cell's voltage is abnormally high or low.

SOC Inspection

Check the SOC of battery system through the monitor system. Check if the battery string is abnormal SOC.

Cable Inspection

Visual inspect all the cables of battery system. Check if the cables are broken, aging, or getting loose.

Balancing

The battery strings will become unbalanced if not full charged for a long time. The balancing maintenance (full charged) should be done every 3 months and is usually done automatically by communication between the system and external device.

Output Relay Inspection

Under low load condition (low current), switch the output relay to OFF and ON to hear the clicking sound, which means this relay can be turned off and on normally.

History Inspection

Analyze the history records to check if there is an accident (alarm and protection) and analyze the reasons.

Environment Inspection

Check the installation environment such as dust, water, insect etc. Ensure that it is suitable for IP65 battery system.

Shutdown and Maintenance

Some battery function must be restarted before ESS maintenance. ESS maintenance shall be done at least once every 6 months.

6.3 Troubleshooting

DANGER

Danger: This system is a high voltage DC system, operated by qualified and authorized person only.

DANGER

Danger: Before checking the failure, ensure to check that all the cables connection and the BESS system can be turned on normally.

No	Problem	Possible Reason	Solution
1	No power output, no LED on.	Too short time for pressing Start button.	Press and hold at least 5 seconds to turn on. Press and hold at least 10 seconds for black start.
		The button battery in controller is missing or has failure. The power supply in control module (BMS) has failure.	Change the control module.
		The battery voltage is too low.	Ensure that there are at least 2 battery modules.
		The connector of base has failure, or the base is not connected.	Ensure that the base is in connected properly and change base if necessary.
2	After turning on, Status LED slow flashing orange. Others off.	Self-checking failure. DC side has a voltage, but voltage difference with the battery system is higher than 20 volts.	Ensure that there is no DC voltage or set correct DC voltage before pressing Start button. Follow power on process to turn on.
		BMS internal failure.	Use debug tool/Wi-Fi monitoring to further analysis or change the control module.
3	Status LED fast flashing orange, others off.	The time interval after latest black start is too short.	Wait more than 5 minutes and try black start again.
		The battery system under error condition such as: temperature or current protection or other errors, thus no response to black start.	Ensure that there is no other protection factor. Or use debug tool for further analysis.

No	Problem	Possible Reason	Solution
4	Buzzer ring continues	Relay adhesion or failure.	Completely disconnect battery system with any DC source then make a restart. If problem still exists, then replace the controller.
5	Status LED solid orange. Battery module LED blue solid.	Communication lost with inverter	Check the communication cable PIN and wiring is correct. Check the inverter communication settings
		Over current protection.	Check DC side. And wait until BMS release protection.
		Control module failure.	Use debug tool for further analysis or change the control module.
6	Status LED solid orange. Battery module exists LED in orange solid	Over/ under temperature protection.	Check environment temperature. And wait BMS release.
		Over voltage protection.	Check DC charge voltage setting or wait BMS release.
		Under voltage protection.	Perform black start function, and then charge the system.
		Battery module BMS failure	Use debug tool for further analysis or change the battery module.
7	All LED blue but no output.	Fuse fusing	Change the control module
8	Other failure	Cell failure or electrical board failure. Or debug tool is needed for further analysis.	If you still can't debug the failure, please contact with distributor or Pylontech.

Once a certain failure is detected following the trouble shooting procedure, turn off the battery string first before replacement so as to avoid further over discharge to the system due to the self-consumption.

6.4 Replacement of Main Components among the BESS

DANGER

Danger: This system is a high voltage DC system, operated by qualified and authorized person only.

DANGER

Danger: Before replacing the main component, turn off the maintenance battery string's power, and ensure that the D+ and D- terminal are without power. Refer to *chapter 7* for turning off process.

6.4.1 Replacement of Battery Module

Procedure

1. Charge existing module to full (SOC 100%). Make sure new battery module is 100% SOC as well.
2. Turn off the whole battery string's power. Make sure to confirm the D+ and D- terminals are without power. Refer to *Section 6.1 System Turning Off*.
3. Dismantle D+ and D- power cables, communication cable and grounding cable.
4. Dismantle the control module's fix screws on the interface panel and display panel.

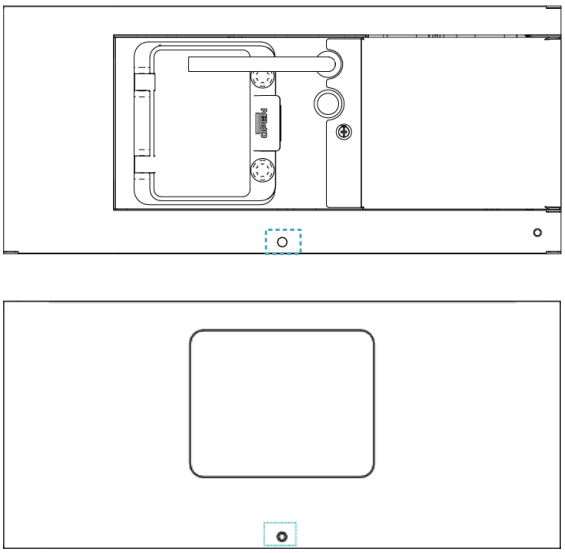

5. Remove the control module and each battery module one by one.

DANGER

Danger: When battery is connected together with the base, the internal socket still has high voltage DC power from serial connected battery modules.

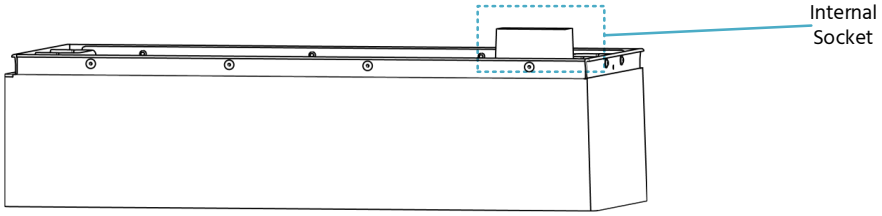

⚠ WARNING

Warning: Single battery module weights 60 kg. If there are no handling tools, at least more than 4 people are needed to handle with it.

NOTE: Before replacing the new battery module, please compare the production dates of the old and new batteries. The production date of the old battery module can be found on the label affixed to the battery casing, while the production date of the new battery module can be found on the label on the packaging. Please ensure that the time interval between the two dates is within one year.

6. Pile up the new battery module. And install back the battery modules and control module.
7. Fix back the two screws on the control Module's. And install back the fix metal brackets.
8. Install back grounding cable, communication cable and the D+ and D- power cables.
9. Turn on this battery string, referring to *Section 6.1 System Turning Off.*

6.4.2 Replacement of Control Module

Procedure

1. Turn off the whole battery string's power. Make sure to confirm the D+ and D- terminals are without power. Refer to *Section 6.1 System Turning Off.*
2. Dismantle D+ and D- power cables, communication cable and grounding cable.
3. Dismantle the control module's fix screws on the left and right (same as *Section 6.4.1 Replacement of Battery*).
4. Dismantle the fix metal brackets (same as *Section 6.4.1 Replacement of Battery*).
5. Remove the control module.

DANGER

Danger: When battery is connected together with the base. the internal socket still has high voltage DC power from serial connected battery modules. Beware of electric shock.

6. Pile up the new control module.
7. Fix back the screws on the control module's interface panel and display panel. And install back the fix metal brackets.
8. Install back grounding cable, communication cable and the D+ and D- power cables.
9. Turn on this battery string, referring to *Section 6.1 System Turning Off*.

7 Shipment and Storage

7.1 Shipment

Before shipment, single module is pre-charged to about 100% SOC, or according to customer requirements. After delivered on-site, the remaining battery capacity is determined by the storage time and condition.

- The battery modules should meet the UN38.3 certificate standard.
- In particular, local rules and policies (e.g. ADR: European Agreement concerning the International Carriage of Dangerous Goods by Road) for the product transportation shall be complied with. For more details, please enquiry the Safety Data Sheet (SDS) from Pylontech: service@pylontech.com.cn.

7.2 Storage

For long-term storage, e.g. if it needs to be stored for a long time (no more than 6 months), the battery cells are highly suggested to be stored in the temperature range of 5°C~45°C, relative humidity <65% and corrosive-gas-freed environment. It is required to charge them, every six months, and the SOC should be no less than 90%.

⚠ CAUTION

Caution: If you do not follow the above instructions for long term storage of the battery, the cycle life will decrease heavily.

8 Disposal

In case a battery (normal condition or damaged) needs disposal or needs recycling, it shall follow the local recycling regulations to process, and use the best available techniques to achieve a relevant recycling efficiency.

If recycling is needed, please use the following contact information.

T +86-21-51317699 | **F** +86-21-51317698

E service@pylontech.com.cn

W www.pylontech.com.cn

Annex 1: Installation and System Turn-on Process List

Tick after completion	No.	Item	Remark
☐	1	Select the installation sites to meet all technical requirements.	Refer to *Section 3.3* Selecting the Installation Sites
☐	2	Battery base is installed following the technical requirements.	Refer to *Section 3.4.1 Mounting the Battery Rack Base*
☐	3	Install the battery modules.	Refer to *Section 3.4.2 Installing the Battery Module onto the Base.*
☐	4	Install the control module (BMS) and the battery module well.	Refer to *Section 3.4.3 Battery Modules and Control Module (BMS) Pile up*
☐	5	Connect D+ and D- between BMS to the inverter/PCS or confluence cabinet.	Refer to *Section 4.3 Multi-string Cable Connections.*
☐	6	Connect the grounding cable.	Refer to *Section 4.2 Grounding.*
☐	7	Double check that all the power cables, communication cables, grounding cable are installed well.	Refer to *Section 4.2 Grounding and 4.3 Multi-string Cable Connections.*
☐	8	Switch on the external power or inverter/PCS, and ensure that all the power equipment can work normally.	Refer to *Section 5.1 System Turning On*
☐	9	The first installation should do full charging progress automatically. If the status LED of BMS turns to blue, it means this battery string is in operation.	

Annex 2: System Turn-off Process List

Tick after completion	No.	Item	Remark
☐	1	Soft-off the inverter through inverter's control panel.	Refer to *Section 6.1 System Turning Off*
☐	2	Turn off the switch between inverter and this battery string (Reefmagic(-Pro)), or turn off the power switch of inverter, to make sure no current through this battery string.	Refer to *Section 6.1 System Turning Off*
☐	3	Turn off the power switch of the BMS.	Refer to *Section 6.1 System Turning Off*

Pylon Technologies Co., Ltd.

No.300, Miaoqiao Road, Kangqiao Town

Pudong New Area, Shanghai 201315, China

T +86-21-51317699 | **F** +86-21-51317698

E service@pylontech.com.cn

W www.pylontech.com.cn